SERVICE MANUAL

Valeo TM21 Compressor

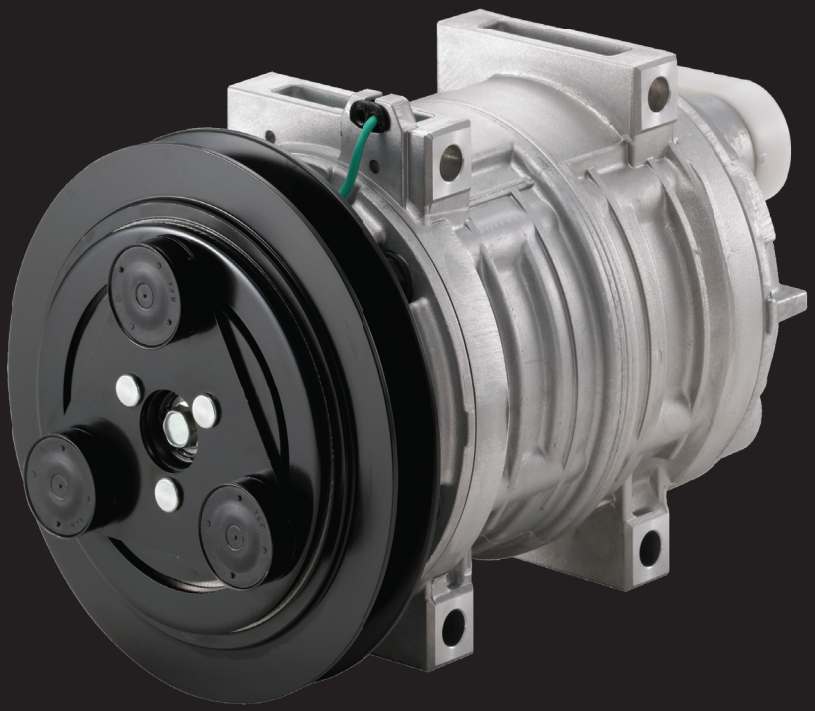

valeo added™

Copyright © 2015 Valeo Japan CO., LTD. All rights reserved.

Valeo

Foreword

This service manual has been elaborated to help service personnel to provide efficient and correct service and maintenance on the **TM21** model compressors (for HFC-134a) for automotive air conditioning.

This manual includes the operation specifications, procedures for disassembly, reassembly and inspection of the compressor.

The contents of this manual, including illustrations, drawings and specifications were the latest available at the time of printing.

Valeo Japan reserves the right to make changes in specifications and procedures at any time without notice.

VALEO JAPAN CO., LTD.

WARNINGS

The following warning signs are used in this service manual.
These are extremely important to ensure safe operation and to prevent body injuries and property damage.
They must be fully understood before starting the air conditioner maintenance.

WARNING! Maintenance must be properly done to avoid serious injury risks.

CAUTION! Improper maintenance can result in injury or property damage.

MEANING OF MARKS

The following marks are used in this service manual to facilitate correct air conditioner maintenance.

Advice Procedures necessary to ensure the best air conditioner maintenance.

Note Information to optimize the air conditioner maintenance.

Contents

1- Product description..... 3
2- Operation precautions..... 12
3- Handling instructions..... 13
Maintenance precautions..... 13
Compressor handling..... 14
Compressor removal..... 14
Oil return operation..... 15
Oil handling..... 15
Oil contamination..... 16
Oil check..... 16
Replacement of components..... 17
Running-in operation..... 18
Leak test..... 19
4- Troubleshooting 23
5- Tightening torques..... 29
6- Service procedures - Magnetic clutch..... 30
7- Services procedures - Shaft seal assembly..... 34
8- Services procedures - Cylinder heads..... 37
Cylinder heads (Front & Rear)..... 37
Reassembly..... 39
9- Service tools..... 41
10-Service parts 42

Compressors

MODEL	TM21
TECHNOLOGY	Heavy Duty Swash Plate
DISPLACEMENT	215cc / 13 in³ per rev.
NUMBER OF CYLINDERS	10 (5 double-headed pistons)
REVOLUTION RANGE	700-6000 rpm
DIRECTION OF ROTATION	Clockwise or counter clockwise (depending on clutch type)
BORE	32 mm (1.26 in)
STROKE	26.7 mm (1.05 in)
SHAFT SEAL	Lip seal type
REFRIGERANT	HFC-134a
OIL (QUANTITY)	ZXL 100PG PAG OIL (180 cc/11 in³)
WEIGHT (w/o clutch)	5.1 kg / 11.3 lbs
DIMENSIONS (w/o clutch) Length - Width - Height	199 - 127 - 148 (mm) 7.8 - 5 - 5.8 (in)
MOUNTING	Direct (side or base)

Valeo **TM21** Application limits for HFC-134a

Saturated condensing conditions

PSIA	PSIG	°F	MPaA	MPaG	°C
314	299	**160**	2.17	2.06	**71**
191	177	**122**	1.32	1.22	**50**
100	85	**79**	0.69	0.58	**26**

t_c : Condensing temperature
t_e : Evaporating gas temperature

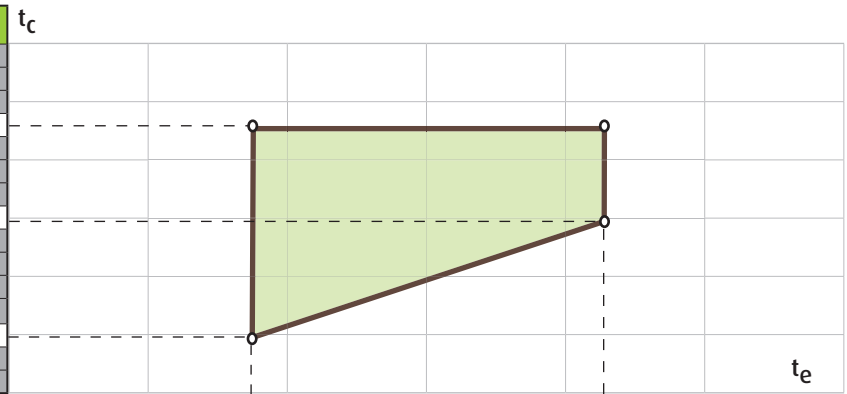

			-10					**14**			°C
			0.10					0.37			MPaG
			0.20					047			MPaA
			14					**57**			°F
			14					54			PSIG
			29					69			PSIA

Saturated evaporating conditions

Magnetic clutch*

VALEO **TM21** is available either as a compressor and magnetic clutch assembly or as a compressor body that customers can fit with compatible magnetic clutches. The magnetic clutch design Valeo has been promoting for more than 20 years is now gradually adopted by major market actors.

Our compressors and magnetic clutches have successfully passed the thousand hours of long validation tests in the Valeo Compressors research center laboratory. Operational excellence was demonstrated during hot season testing on the field under challenging climates in the most stressful conditions.

Our robust magnetic clutch provides the best way to reduce fuel consumption without using additional unloading devices that decrease significantly the efficiency and durability of the compressor. The range of Valeo magnetic clutches ensures an unmatched reliability and the longest durability that perfectly matches the Valeo **TM21** compressor qualities.

Specifications **TM21**

TYPE	Electromagnetic single-plate dry clutch
RATED VOLTAGE	12 VDC or 24 VDC
POWER CONSUMPTION	49 W maximum
STATIC TORQUE	40 N.m (min.) after burnishing : 59 N.m (min)
DIRECTION OF ROTATION	Clockwise or counter clockwise (depending on clutch type)
WEIGHT	Approx 3.0 kg {6 lbs}
V-BELT TYPE	V-groove (A or B) or V-ribbed (PK)

*Please note that the maintenance procedures introduced in this service manual apply only to magnetic clutches provided by Valeo.

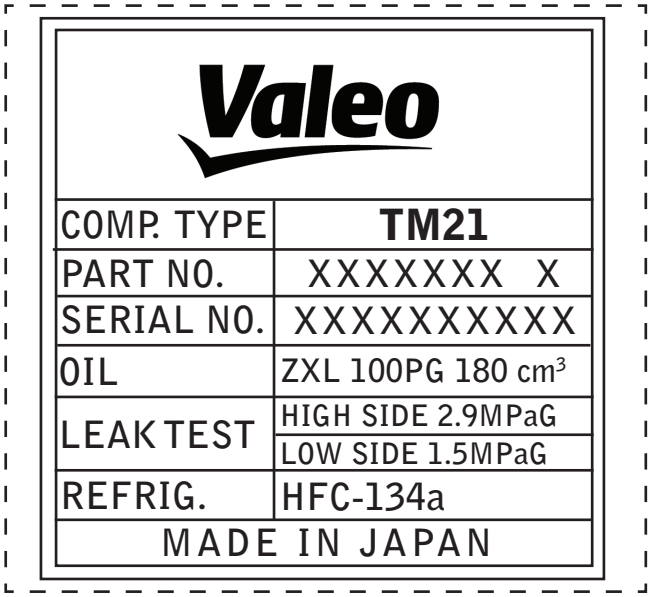

Name plate

To ensure that the compressor operates smoothly, respect carefully the indications written on the name plate.

1-Product description - Dimensions TM21

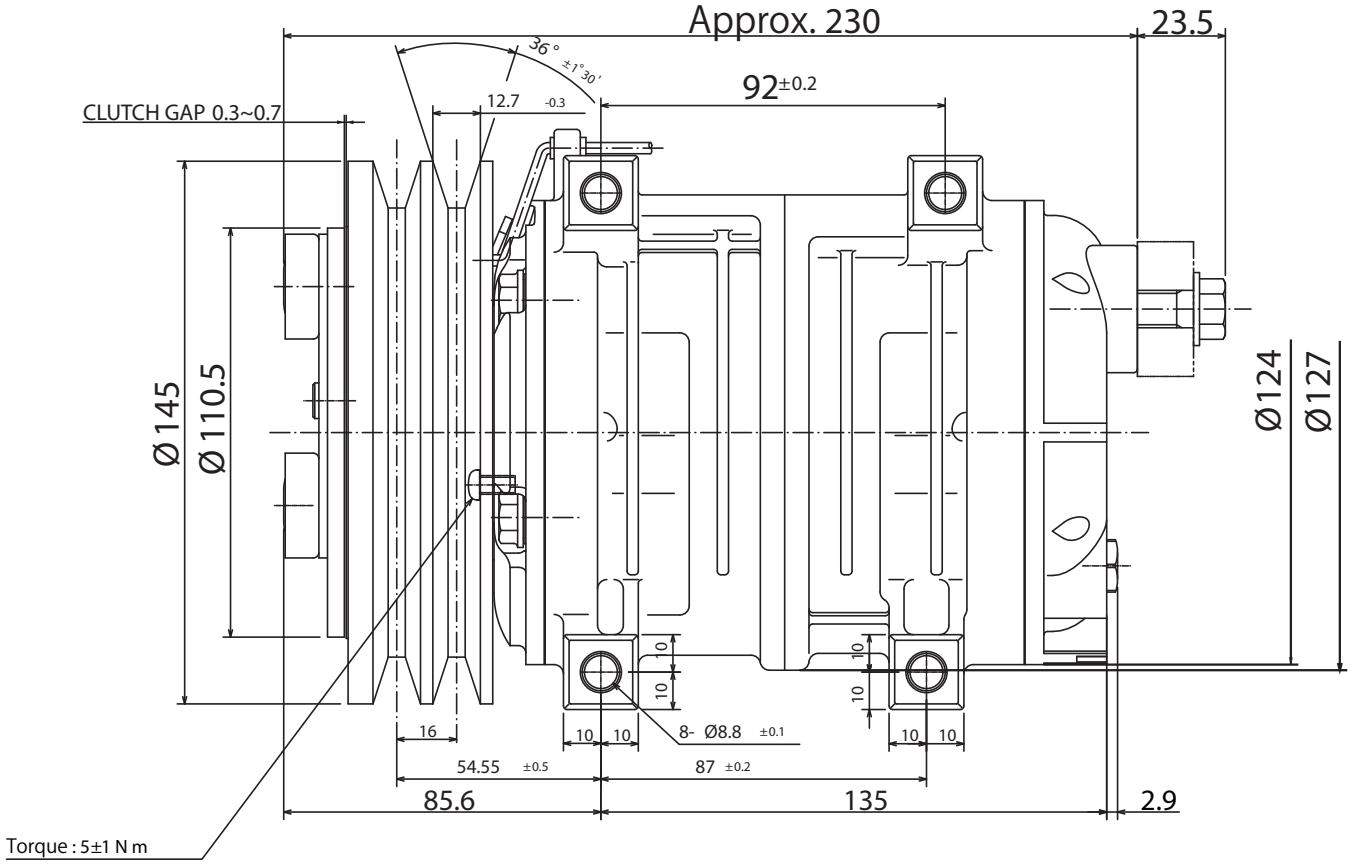

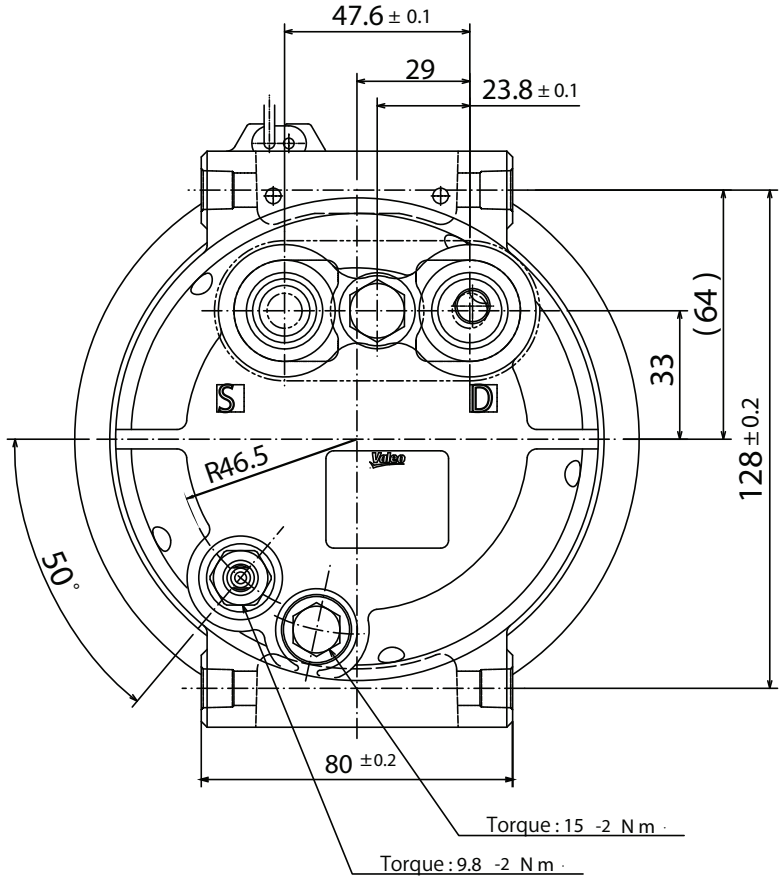

1-Product description - Exploded view

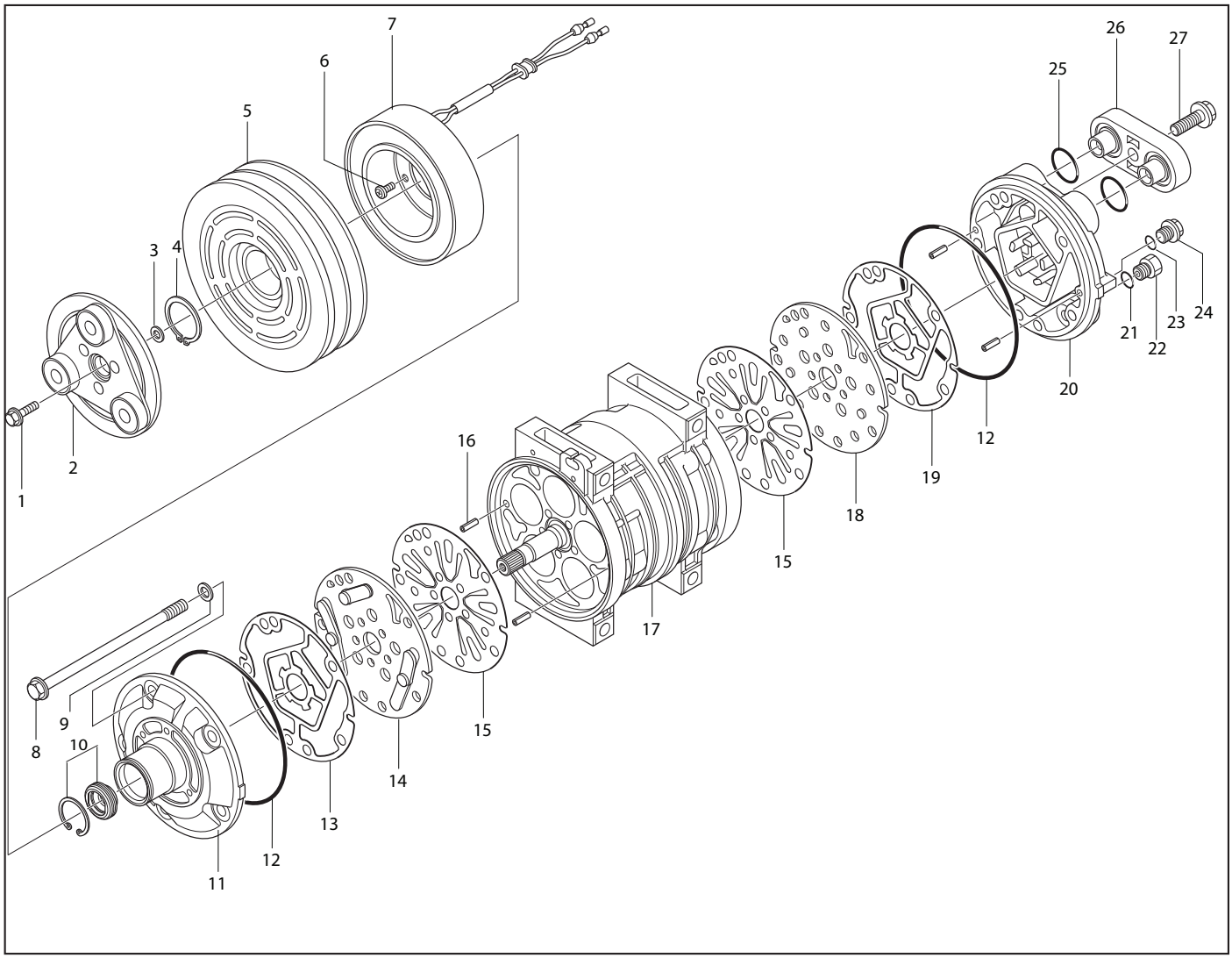

1. Center bolt
2. Armature assembly
3. Adjusting shim
4. Snap ring
5. Pulley assembly
6. Screw
7. Field coil
8. Bolt
9. Gasket
10. Shaft Seal assembly
11. Front cilynder head
12. O-Ring
13. Gasket
14. Valve plate assembly
15. Suction valve
16. Pin
17. Cylinder shaft assembly
18. Valve plate assenbly
19. Gasket
20. Rear cylinder head
21. O-ring
22. Plug
23. O-ring
24. Relief Valve
25. O-ring
26. Shipping plate
27. Bolt

1-Product description - Performance

The performance data below were measured under the following conditions:

- Compressor speed: 1450 rpm
- Suction Gas Temperature: 20°C

Cooling capacity Q (kW) & Power consumption P (kW)								
Conditions			Evaporating Temperature (°C)					
Condensing Temperature (°C)	Pd (MPaG)		-10	-5	0	5	10	12.5
			Ps (MPaG)					
			0.10	0.15	0.19	0.24	0.32	0.35
40	0.91	Q (kW)	5.88	7.54	9.59	12.10	15.06	16.86
		P (kW)	2.05	2.28	2.49	2.68	2.83	2.89
50	1.21	Q (kW)	5.02	6.48	8.24	10.31	12.84	14.17
		P (kW)	2.21	2.47	2.73	2.98	3.20	3.29
60	1.58	Q (kW)	4.09	5.38	6.90	8.63	10.75	11.92
		P (kW)	2.34	2.66	2.97	3.26	3.50	3.67

Valeo **TM21** conversion factors

The performance data at different rotation speed can be approximated with the conversion factors below.

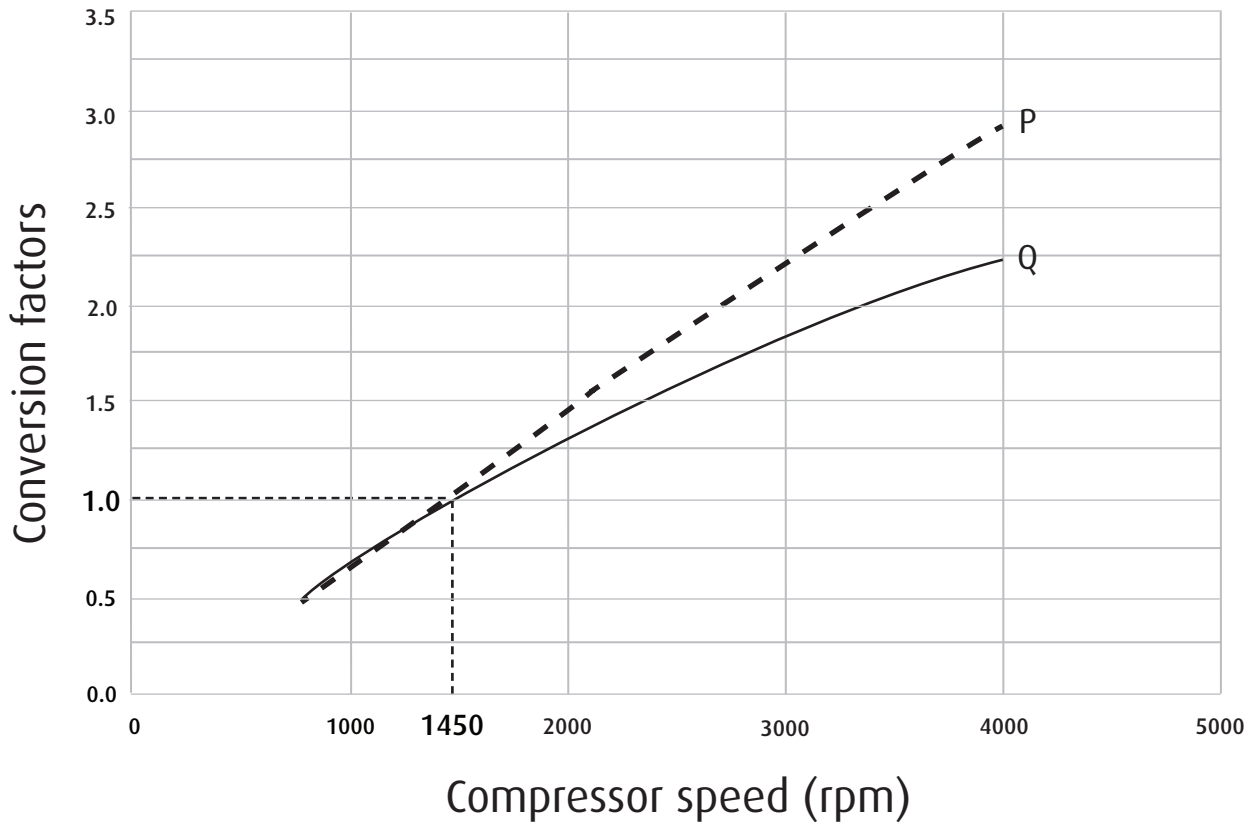

1-Product description - Swash plate system

Valeo **TM21** are 10-cylinder swash plate type compressors. With this type of compressor, the cylinders and pistons are arranged axially along the drive shaft.
The pistons operate within the cylinders and are driven by a swash plate to perform suction, compression and discharge.

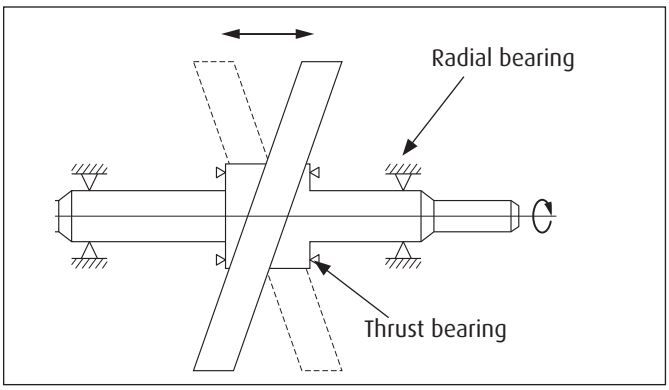

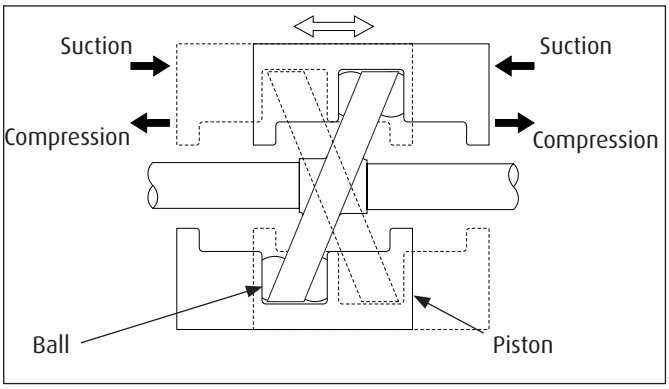

Swash plate system

The drive shaft, which is driven by the engine through the magnetic clutch, is equipped with a swash plate.
The drive shaft is supported by two radial bearings and two thrust bearings.
The swash plate is rotated by the drive shaft, and moves the pistons back and forth.

Piston Drive System

The pistons in the cylinders are mounted on the swash plate through hemispherical shoes.
Each piston has a compression head at each end. The rotation of the swash plate results in a reciprocating piston movement parallel to the drive shaft.
The cylinders, which are arranged at 72° intervals around the drive shaft, are each divided into 2 chambers, providing 5 front and 5 rear bores.
As each piston performs suction and compression at either end, the compressor operates as a 10-cylinder compressor.

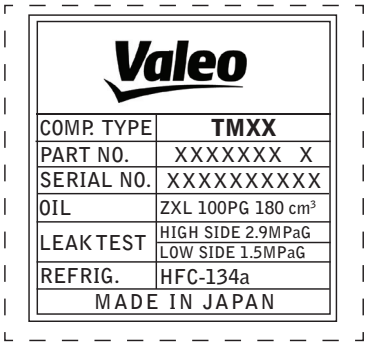

COMP. TYPE	TMXX
PART NO.	XXXXXXX X
SERIAL NO.	XXXXXXXXXX
OIL	ZXL 100PG 180 cm³
LEAK TEST	HIGH SIDE 2.9MPaG
	LOW SIDE 1.5MPaG
REFRIG.	HFC-134a
MADE IN JAPAN	

Full charge of compressor oil

Each compressor is delivered filled with a specified quantity of compressor oil as described on its label.

The total amount of oil your air conditioning system requires is provided by the system designer or supplier.

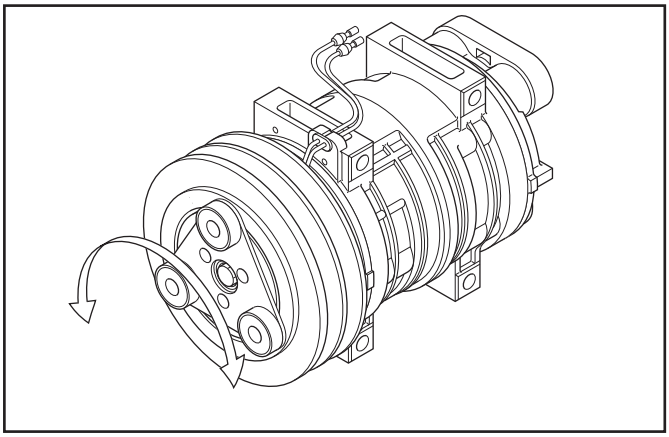

Compressor

1. The direction of rotation is clockwise or counter clockwise.

Operation condition table

Item	Condition
Surrounding temperature	Under 120°C (248°F)
Speed	Minimum: 700 r/min Maximum: 6000 r/min Continuous: 6000 r/min
Pressure	Maximum: 2.07 MPaG {22.1 kgf/cm², 299 psig}

2. The compressor must be operated under the conditions shown in the operation condition table on the left.

CAUTION!

The A/C cycle components must be designed so that the pressure in the cycle does not exceed 2.07 MPaG {22.1 kgf/cm2, 299 psig}

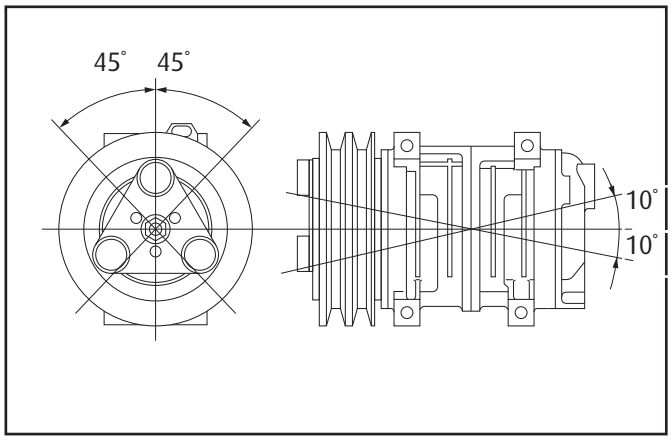

4. Inclination limit at installation
   The compressor must be installed on the vehicle within the range shown to the left.

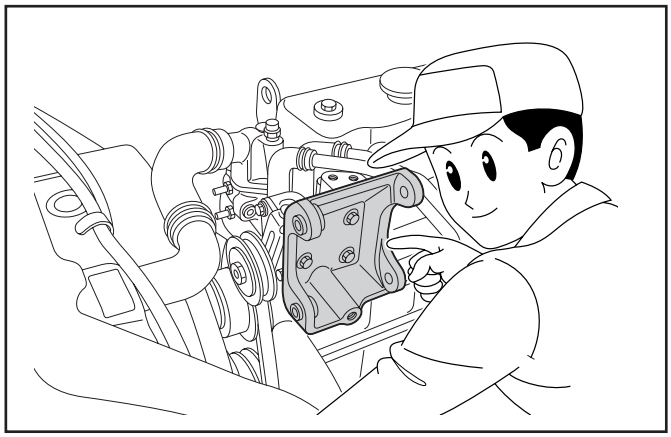

Compressor bracket

1. Install the bracket securely on the chassis frame or engine body. As the engine vibrations may be severe, the bracket and mounting bolts must be installed securely.
2. Vibration resistance
   There must not be any resonance under 250 HZ.

Magnetic clutch

1. Voltage

   DC 24 V
   The terminal voltage of the magnetic clutch must exceed 21 V.

   DC 12 V
   The terminal voltage of the magnetic clutch must exceed 10.5 V.

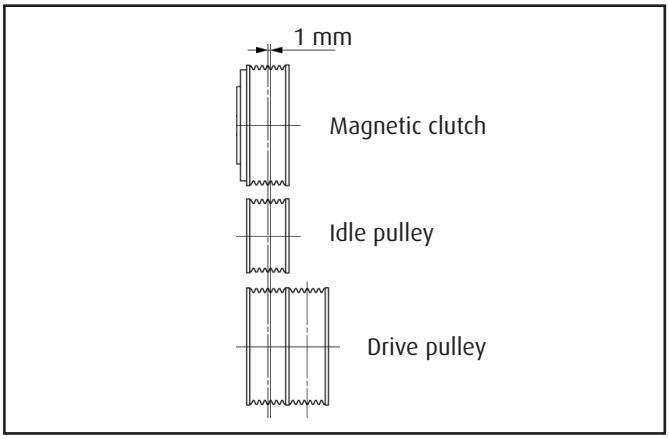

2. Ratio of magnetic clutch to drive pulley

- When the compressor is driven from the pulley drive of the vehicle, the magnetic clutch to drive pulley ratio should avoid the range 1: 0.92-1.08 to limit vibration and resonance.
- The compressor speed must not exceed the specified speed.

CAUTION!

Pulley ratio is the ratio of the magnetic clutch diameter to the drive pulley diameter.

3. Pulley alignment tolerance is less than 1mm (0.04 in).
4. Pulley groove: V-groove or V-ribbed.
5. The belt tension must be adjusted to the tension specified by the belt maker.

2-Operation precautions

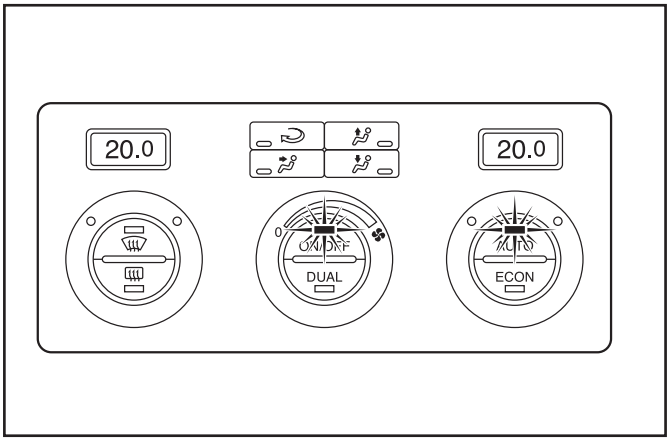

1. During the off season of the air conditioner, operate the compressor for a few minutes once a week.
2. Do not drive through water. Water may damage the magnetic clutch, thus preventing normal operation.
3. Always charge the A/C system with the specified quantity of refrigerant.

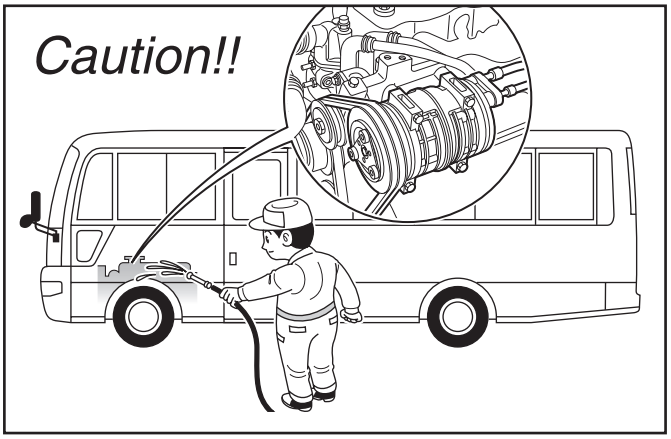

4. Keep the compressor clear of water projection while cleaning the vehicle.

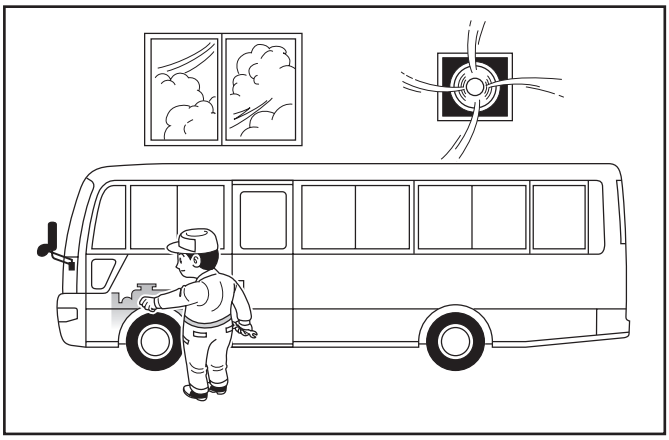

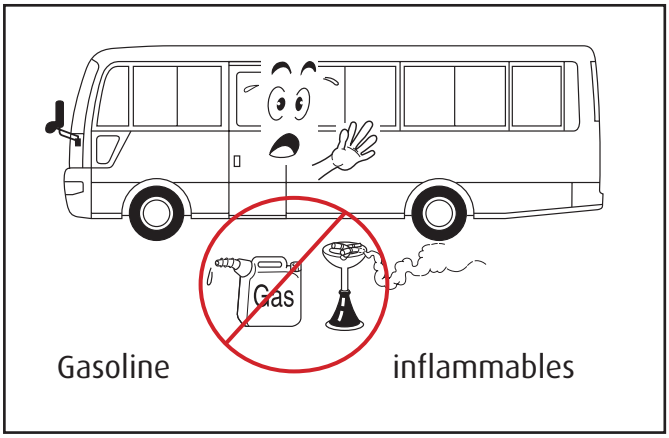

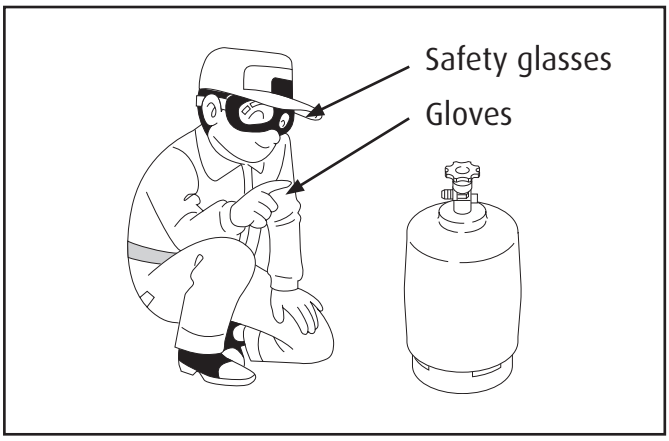

Maintenance precautions

Work area

As the components of air conditioners are particularly sensitive to moisture, dirt and rust, always observe the following:

- Work indoors whenever possible
- Select a flat ground work area
- Keep the work area clean
- Select a work area with adequate ventilation.

CAUTION!

Refrigerant itself is not harmful, but excessive accumulation in a closed area can cause oxygen deficiency.

- Keep open flame and inflammables away from the vehicle in which the air conditioner is being installed.
  (Fire is particularly dangerous during the gas leak inspection following installation)

WARNING!

Contact with flame and high temperatures can generate toxic gases.

Refrigerant handling

WARNING!

Direct contact with refrigerant can cause frostbite or blindness.
Always wear safety glasses and protective gloves.
Do not work with refrigerant close to your face.

1. Do not misidentify refrigerants

If an HFC-134a air conditioning system is mistakenly charged with another refrigerant, serious problems such as compressor seizing may occur. Therefore, confirm before charging with refrigerant that the type of air conditioning system is an HFC-134a system.

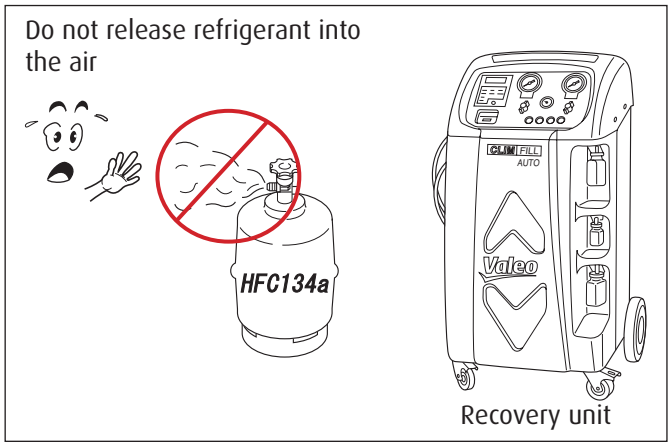

2. Do not release refrigerant into the air
Although HFC-134a is not subject to CFC regulations, it can have an effect on global warming and so should not be released into the air. When removing refrigerant from the air conditioner system, always use a refrigerant recovery unit made specifically for HFC-134a.

Compressor handling

Do not strike or unecessarily turn the compressor upside down. If the compressor is knocked over or turned upside down during handling or installation, rotate the armature plate 5 or 6 times by hand to circulate the oil.
Otherwise, oil in the cylinder during compressor start-up will cause valve damage and reduce durability.

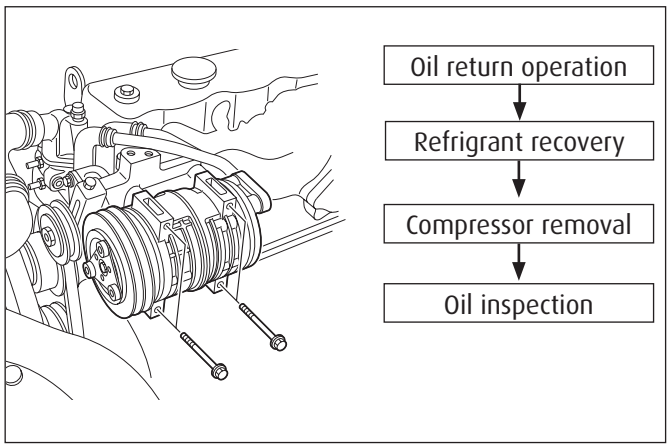

Compressor removal

When the compressor is operational

1. Perform the oil return operation (see p.15).
2. Recover the refrigerant from the system using a refrigerant recovery unit.
3. Remove the compressor.
4. Drain the oil from the compressor and close all open connections immediately.
5. Check the oil quantity and the degree of contamination (see p.16).

When the compressor is inoperable

1. Recover the refrigerant from the system using a refrigerant recovery unit if the shut-off valves are to be removed with the compressor.
2. Remove the compressor.
3. Drain the oil from the compressor and close all open connections immediately.
4. Check the oil quantity and the degree of contamination (see p.16).

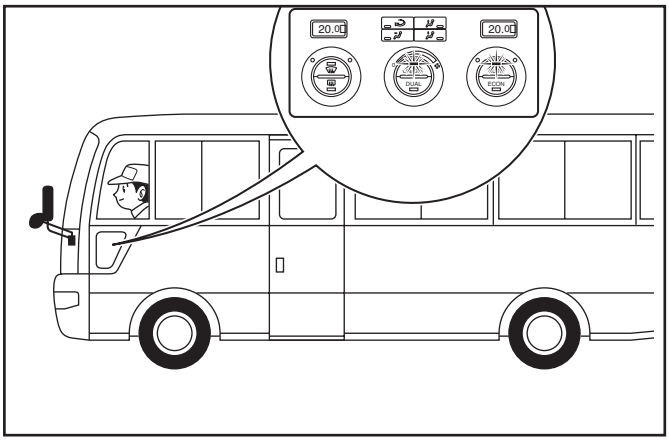

Oil return operation

Compressor oil mixed with refrigerant is circulating in the air conditioning system.
Perform the oil return operation to return this oil to the compressor before removing components from the system.

1. Open the doors and windows and operate the blower motor at maximum speed.
2. Operate the vehicle engine at idling during at least 20 minutes.

Note: The maximum amount of oil cannot be recovered at higher speeds. This operation also requires a warm ambient temperature.

Oil handling

Oil specification

Use only ZXL 100PG (DH-PS)

Oil quantity inspection

There is no particular need for frequent inspection or replacement, although it is recommended to check operating refrigerent pressures and oil levels at the start of the season.
Please replace the refrigerant and restore the system oil and refrigerant charge to factory specifications if:

- the AC system is opened for repair or replacement of any component (e.g.: evaporator, condenser or receiver drier)
- any loss of charge - refrigerant or oil - is detected.

Handling precautions

1. The oil must be free from dust, metal filings, etc.
2. Do not mix oils.
3. The moisture content must not exceed 1,000 ppm. (PAG oil only)
4. The oil easily absorbs moisture when the container is open. Therefore always seal the container immediately after use.

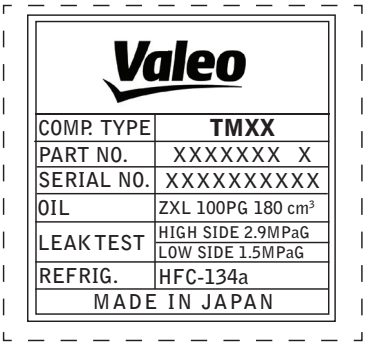

Full charge of compressor oil

Each compressor is delivered with the specified quantity of compressor oil, depending on the type of air conditioning system.
A label describing the amount of compressor oil is attached to the compressor.

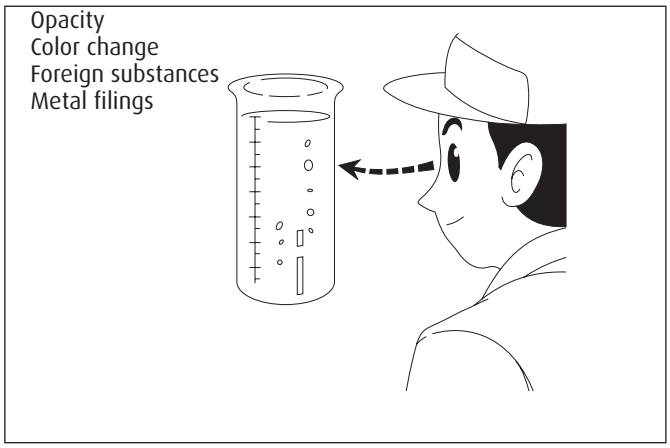

Oil contamination

Unlike engine oil, no cleaning agent is added to the compressor oil. Even if the compressor is run for a long period (approximately 1 season), the oil never becomes turbid as long as there is nothing wrong with the compressor or its method of use. Inspect the extracted oil for any of the following.

- Increased opacity of the oil.
- Color change to red.
- Presence of foreign matter, metal filings, etc.

WARNING!

When system (oil) contamination is found during compressor replacement, flush the A/C system with a fluid that meets SAE J2670 and replace the drier (or accumulator).

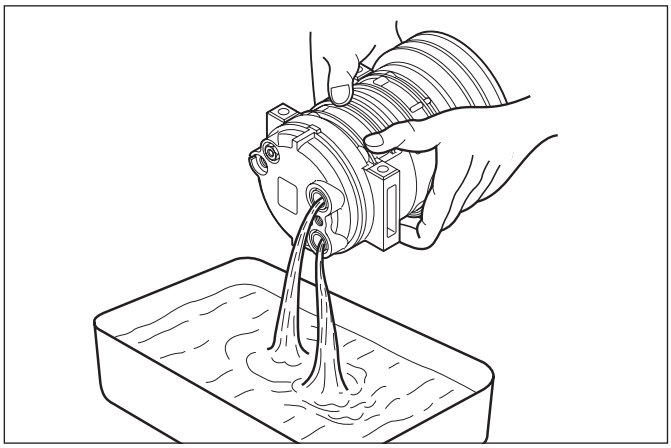

Oil check

The compressor oil must be checked as follows when being charged into a used system.

1. Perform the oil return operation (see page 15).
2. Remove the compressor from the vehicle.
3. Remove the oil filler plug and drain the oil through the oil filler plug and the high and low pressure connectors.
4. Check the oil for contamination.
5. Fill the compressor with the specified amount of oil through the Suction port (see illustration on the left).

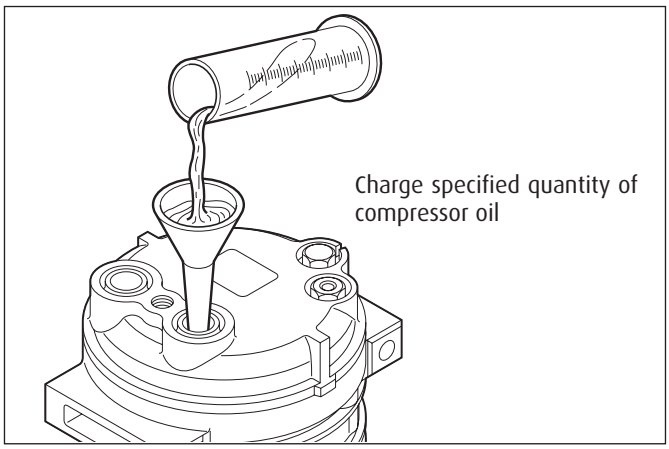

unit: cm³ & cc

			Current Compressor is kept	Compressor is replaced
	Factory oil charge	Amount recovered	Charging amount	Amount to remove from new compressor
TM21	180	108 or more →	Same as recovered	180-(amount recovered)
		Under 108 →	108	54

CAUTION!

The specified oil quantity differs, depending on the type of air conditioner system. A label describing the specified quantity is attached to the compressor.
Additionally, all of the oil cannot be removed when draining the compressor as some will remain as an oil film on the inside of the compressor and the system components. Therefore, refer to the table on the left when recharging the compressor with oil. Excess oil adversely affects the cooling capacity and the compressor.

unit: cu in

			Current Compressor is kept	Compressor is replaced
	Factory oil charge	Amount recovered	Charging amount	Amount to remove from new compressor
TM21	10.9	6.6 or more →	Same as recovered	10.9-(amount recovered)
		Under 6.6 →	6.6	3.2

CAUTION!

The oil filler plug O-ring must be replaced with a new one.

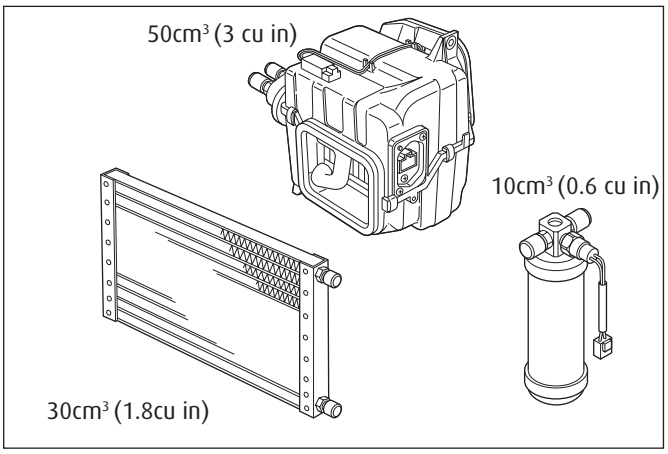

Replacement of components

When replacing the system's component parts, supply the following amount of oil to the compressor.

Component mounted	Amount of oil
Evaporator	50 cm³ (3 cu in)
Condenser	30 cm³ (6 cu in)
Receiver drier	30 cm³ (1.8 cu in)

After installing these component parts, check the compressor oil. Refer to page 16.

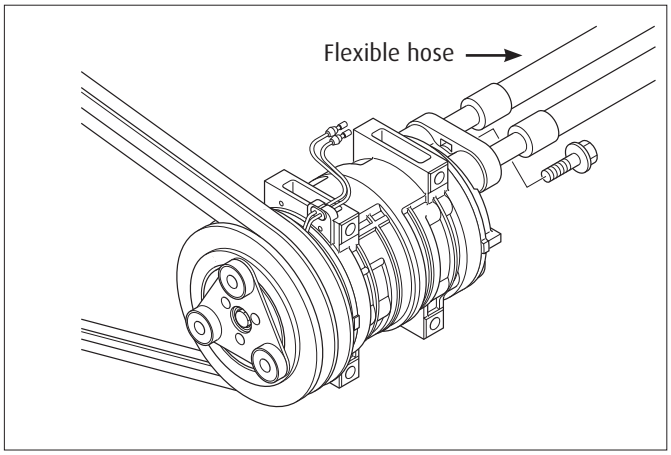

Running-in operation

Whenever moving parts have been replaced, it is necessary to run-in both the compressor and the magnetic clutch.

Compressor running-in

Reassembled compressors must be run-in after the leak test (see next page).

1. Check that the compressor contains the specified amount of oil.
2. Interconnect the suction fitting and the discharge fitting with the flexible hose.
3. Install the high pressure connector and the low pressure connector to the ports and tighten the bolts to the specified torque.
4. Connect the two connector ports using a flexible hose.
5. Run the compressor at 500 rpm for 30 minutes to 60 minutes. This operation may be performed by an electric motor or the engine of an automobile.
6. Replace the oil.
7. Repeat the leak test.

CAUTION!

While the compressor is being run-in in step 3 above, check the outside temperature of the front head. If the temperature exceeds 80°C (176°F), stop the running-in operation. Resume the operation when the head has cooled.

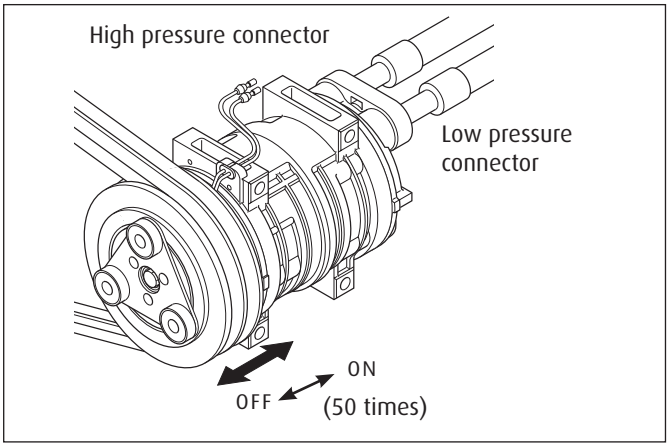

Magnetic clutch running-in

1. Install the clutch on the compressor.
2. Install the compressor on the test bench, and operate the compressor by running the system.
3. Maintain the compressor speed at 700 rpm. Operate the A/C switch through the ON/OFF cycle at least 50 times ("ON" for 10 seconds and "OFF"for 10 seconds).

Leak test

The compressor must be checked for refrigerant leaks after it is repaired. The procedure is as follows.

1. Install the discharge and suctions caps on the compressors
2. Fill the compressor with refrigerant gaz through the suction port raising the pressure at least to 0.4 MPaG (55.3 psig)

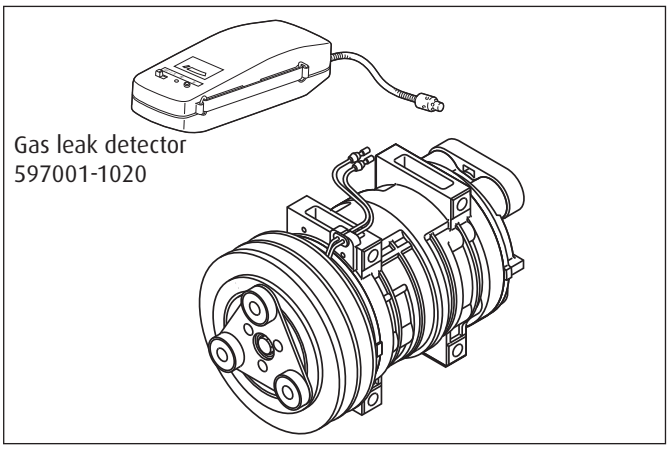

3. Check the compressor for leaks using a leak detector (597001-1020).

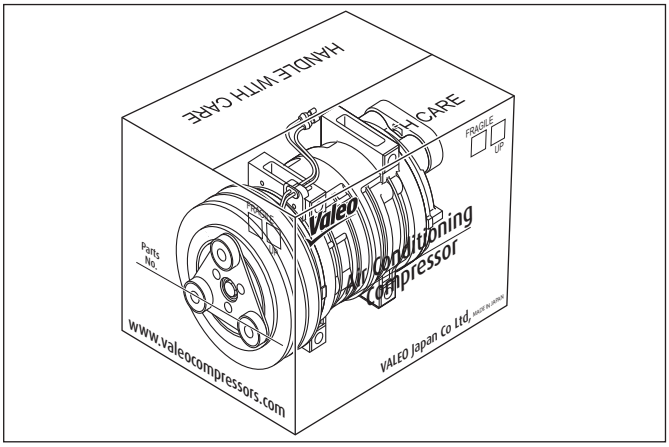

Storing a repaired compressor

If it is necessary to store a repaired compressor for some time before installation, evacuate the compressor and fill it with dry nitrogen gas through the suction fitting to raise the pressure to 49 ~ 150 kPa {0.5 ~ 1.5 kgf/cm^2, 7.1 ~ 21 psi}.

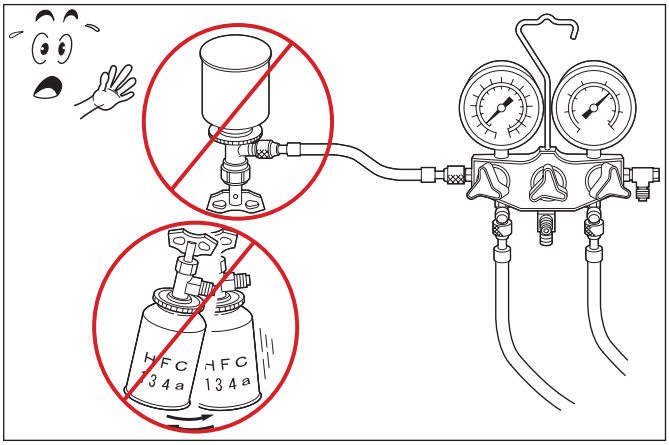

Refrigerant charging

In order to prevent a liquid charge and greatly increase risks of compressor dammage, do not shake or turn the refrigerant bottle upside-down.

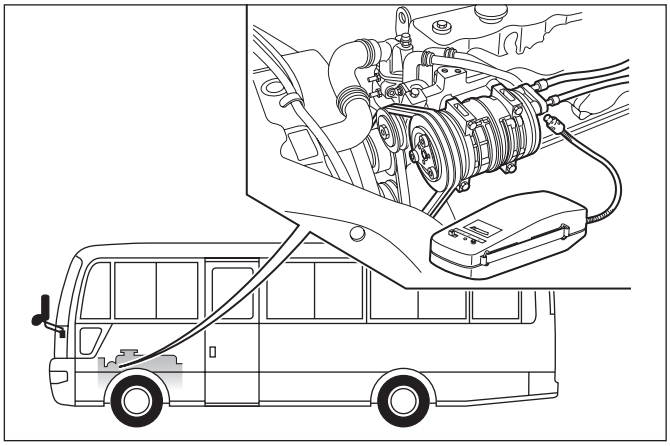

Initial Leak Check

Using the leak detector, check the system connections for leaks.

As the system pressure is not yet high, only large leaks can be detected at this time.

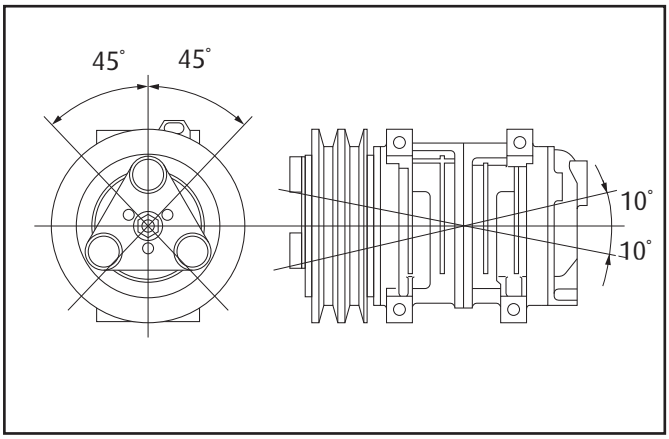

Installation position

The compressor should be installed in the vehicle within the range shown on the left-hand figure. If it is installed outside this range, the compressor will be adversely affected.
This compressor is equipped with a pressure feed lubrication system, which cannot function if the compressor is installed outside this range.
If the compressor is installed outside the range shown on the left-hand figure any or all warranties may be rendred void.

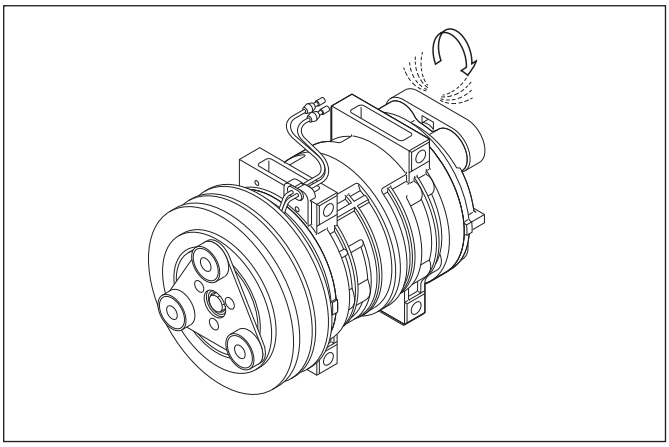

Installation precautions

The new compressor is filled with the specified quantity of compressor oil and nitrogen gas (N_2). When mounting the compressor on the vehicle, please follow as below:
1. Loosen the discharge side connector's cap and gently release nitrogen gas (N_2) from the compressor.

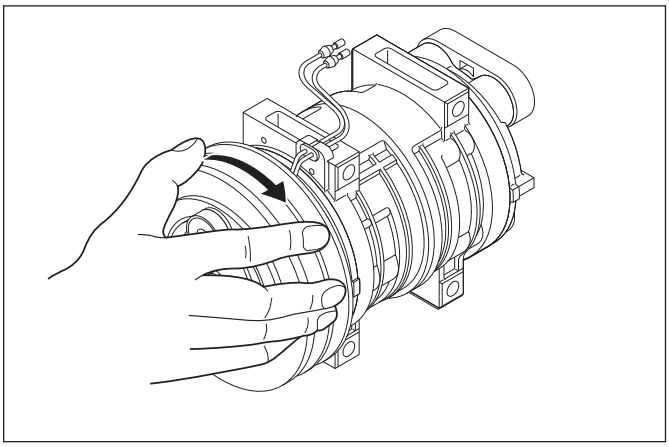

2. Turn the magnetic clutch's armature plate several times by hand to distribute the oil which has settled in the cylinders.

3. When installing the compressor in service system, **the compressor should be installed after adjusting the amount of oil, referring to "oil check"** p.16.

CAUTION!

Do not let the oil escape

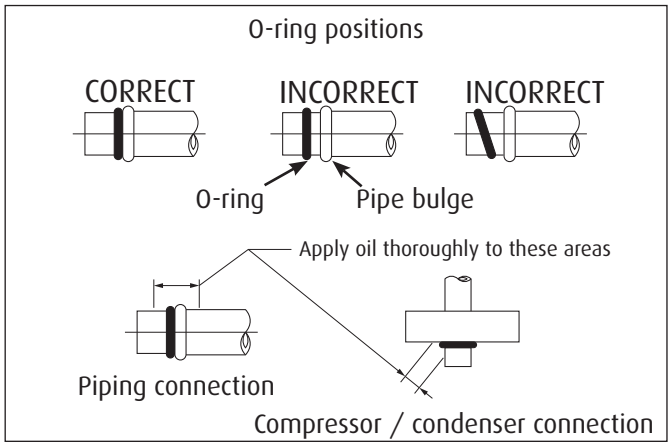

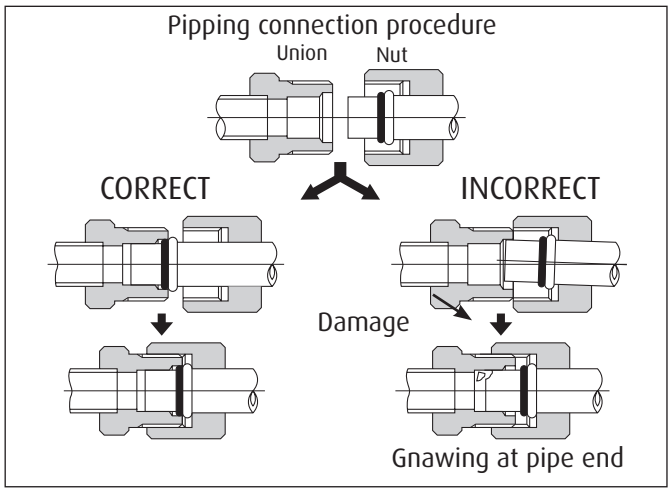

Piping precautions

1. Position the O-Ring against the bulge in the pipe when connecting hoses and pipes.
2. Coat the piping connections and the O-rings with PAG oil.

CAUTION!

Always use the specified oil for HFC134a systems to coat the O-rings.

3. Fit the nuts and unions tightly against the base of the companion pieces, then hand tighten the nut as much as possible. Then tighten to the specified torque.

ADVICE

Valeo Compressors recommends the following hose sizes:
INTERNAL DIAMETER
Suction: Ø 12.5 mm - 1/2 inch
Discharge: Ø 8 mm - 5/16 inch

Compressor troubleshooting

When a problem occurs during the compressor operation, it is often difficult to pinpoint exact the cause of the malfunction.
As long as the compressor maintenance is done correctly, there should not be any problem throughout the whole vehicle life, but should it happen, we hope this troubleshooting can help you solve the issue efficiently.

Below are listed most of the issues you may encounter while the A/C is ON.
Please refer to the compressor troubleshooting tree to localize the malfunction symptom, then look at the table (p.24 - 25) for the appropriate counter measure.

Most of the malfunction symptoms can be classified in the following categories:
1. Insufficient cooling capacity
2. Abnormal noise
3. Smoke

In case of insufficient cooling capacity, we recommend that you prepare a gauge manifold to measure the pressure of both discharge and suction sides (for a detailed diagnosis by gauge pressure, see p.26 - 27).

Compressor troubleshooting tree

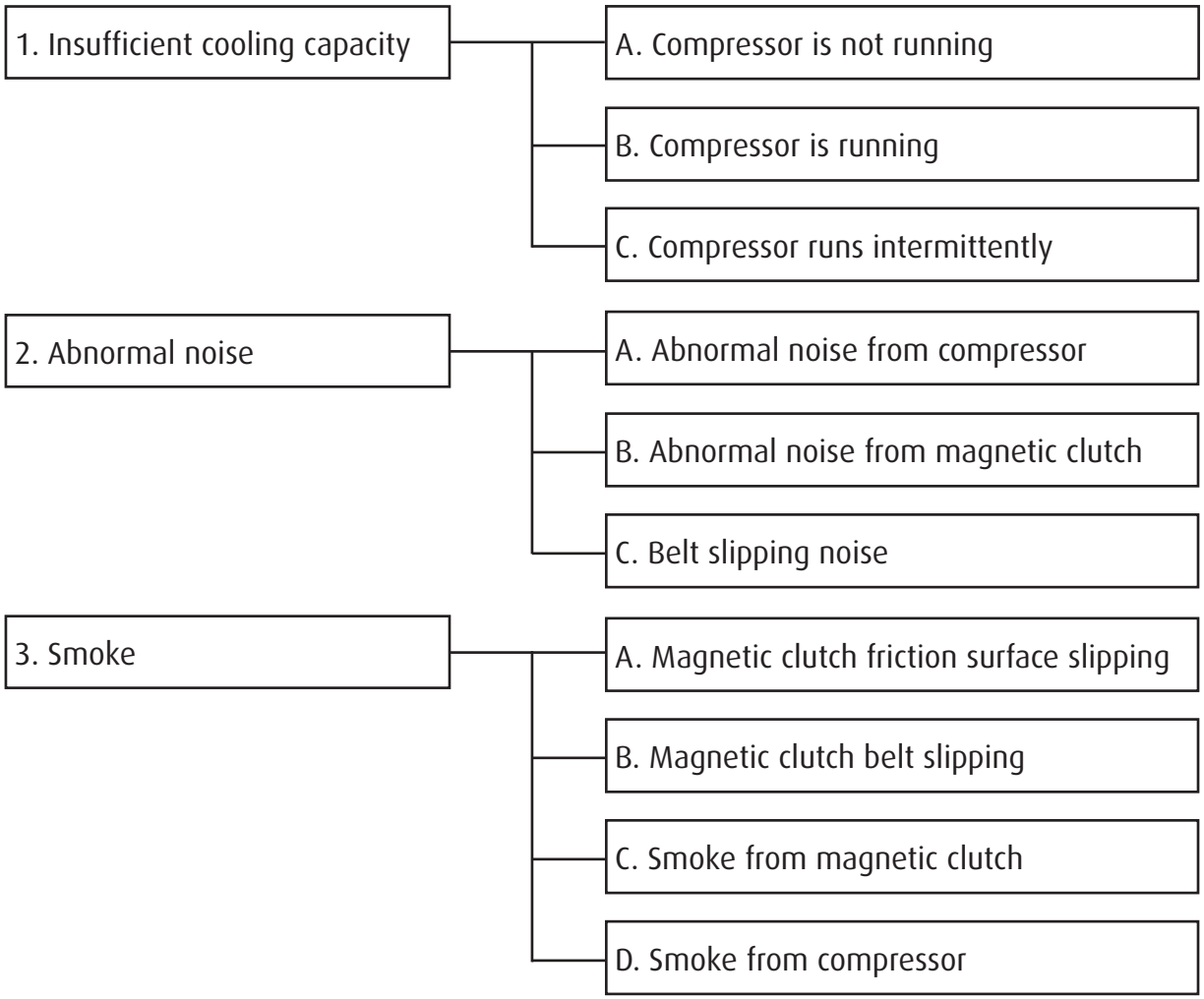

1. Insufficient cooling capacity

	Issue	Symptom	Possible cause	Measure
A	Compressor is not running (No cool blow coming out)	Magnetic clutch slips when turning on the A/C switch	Compressor internal part damage	Replace the compressor
		Low pressure cut switch operates (see p.26-27)	Refrigerant shortage	Fix the refrigerant leakage then fill with refrigerant until reaching the right amount
		The magnetic clutch slips or does not engage when the compressor runs	Lead wire short circuit or wiring connector not seated properly	Replace the lead wire if it is defective
			Magnetic clutch damage	Repair or replace the magnetic clutch
			Magnetic clutch air gap too wide	Adjust air gap or replace magnetic clutch
			Low magnetic clutch voltage	Check the voltage of battery
			Thermal fuse (if provided) opened by high heat	Service system and replace the compressor
		The magnetic clutch engages but the armature does not rotate	Belt slipping	Replace the compressor if it is locked
		Belt run off the pulley	Compressor internal part damage or magnetic clutch damage	Replace the compressor or the magnetic clutch
		Center bolt is loose / Center bolt is missing	Bolt drop off/ Armature drop off	Replace magnetic clutch
B	Compressor is running (No cool blow coming out)	Compressor is running normally	Poor compression	Replace the compressor
		No difference of temperature between discharge side and suction side (see p.26 - 27)	Refrigerant shortage	Fix the refrigerant leakage then fill with refrigerant until reaching the right amount
		The magnetic clutch slips or does not engage when the compressor is running	Magnetic clutch friction surface slipping	Check the voltage of battery or replace the magnetic clutch
			Loose connection of the magnetic clutch electrical circuit	Replace the magnetic clutch after making sure it is defective
		Belt slipping	Magnetic clutch belt slipping	Belt tension readjustment
		The magnetic clutch does not engage	Defective thermostatic switch	Replace the thermostatic switch after making sure it is defective

	Issue	Symptom	Possible cause	Measure
C	Compressor runs intermittently (Cool blow comes out only from time to time)	Both discharge and suction pressures are high	Excess of refrigerant	Reduce the refrigerant charge until reaching the right amount
			Condenser fan failure	Replace the condenser after making sure it is defective
		The magnetic clutch slips or does not engage when the compressor is running	Loose connection of the magnetic clutch electrical circuit	Replace the magnetic clutch after making sure it is defective
		The magnetic clutch does not engage	Defective thermostatic switch	Replace the thermostatic switch after making sure it is defective

2. Abnormal noise

	Issue	Symptom	Possible cause	Measure
A	Abnormal noise from the compressor	Abnormal vibration after turning on the A/C switch	Compressor installation bolt is loose	Increase tightening torque of the loose bolts
			Wide gap at the attaching portion between the compressor and the bracket	Improve the compressor attaching portion
		Abnormal noise from the compressor body	Compressor body internal component damage	Replace the compressor
B	Abnormal noise from the magnetic clutch	The magnetic clutch has a backlash and slips	Magnetic clutch damage	Replace the magnetic clutch
		Strange noise when the magnetic clutch engages	Air gap too wide	Adjust air gap or replace magnetic clutch
		Armature slips / does not engage when the compressor is running	Magnetic clutch friction, slippery surface	Check the voltage of battery or replace magnetic clutch
C	Belt slipping noise	Armature does not rotate when magnetic clutch engages	Belt slipping	Replace the compressor if locked. Readjust the belt tension if the belt is loose

3. Smoke

	Issue	Symptom	Possible cause	Measure
A	Magnetic clutch friction surface slipping	The magnetic clutch slips / does not engage when the compressor is running	Magnetic clutch air gap too wide	Adjust air gap or replace magnetic clutch
			Low magnetic clutch voltage	Check the voltage of battery
			Magnetic clutch friction, greasy surface	Clean friction surface or replace magnetic clutch
B	Magnetic clutch belt slipping	The magnetic clutch slips / does not engage when the compressor is running	Belt alignment is not correct	Adjust the compressor installation position
			Magnetic clutch belt is greasy	Clean or replace the belt
			Magnetic clutch belt tension is loose	Adjust belt tension
C	Smoke from the magnetic clutch	The magnetic clutch does not engage	Coil open or shorted	Replace the magnetic clutch
D	Smoke from the compressor	Refrigerant / oil is blowing out	Refrigerant leaking, uncoupled piping or piping burst	Fix the refrigerant leakage then fill with refrigerant until having the right amount
			Refrigerant blowing from the high pressure relief valve due to excess of refrigerant	Reduce the refrigerant charge until reaching the right amount

A/C cycle diagnosis by gauge pressure

Following is a diagnosis procedure to connect gauge manifold to A/C cycle, measure suction and discharge pressures and analyze the defects of the cycle.

Operation conditions of the A/C cycle for pressure measuring:
1. Ambient temperature: 30 - 35 °C
2. Engine speed: 1,500 rpm
3. A/C switch: ON
4. Blower speed: high
5. Temperature control: full cold

Gauge pressure indication	Cause	Confirmation method	Action to take
Pressure is normal	A/C cycle operates normally. If there is any defect (poor cooling performance), there shall be another cause Discharge pressure: around 0.9 - 1.6 MPaG (10 - 17 kgf/cm²) Suction pressure: around 0.03 - 0.10 MPaG (1.3 - 2.0 kgf/cm²)		
Both discharge and suction pressures are low Suction pressure becomes vacuum	Refrigerant shortage	Connect gauge manifold to cycle	Recover refrigerant, then refill with the right amount of refrigerant
	Receiver dryer is clogged	Temperature difference between inlet and outlet pipes happens. Dryer is covered with frost	Replace parts
	Expansion valve is clogged	Expansion valve was covered with frost	Clean or replace part
	Enclosure leakage from the Expansion valve's temperature sensing tube. (Expansion valve operates to close the valve opening)	Outlet side of the Expansion valve is not cooling. (Low side of gauge indicates vacuum)	Replace part
	Temperature sensing device at outlet air is defective	Evaporator becomes frozen up	Adjust or replace the part
	Refrigerant piping is clogged or crashed	If any part between the dryer and the compressor is clogged or crashed, the low side pressure becomes vacuum	Adjust or replace the part

Gauge pressure indication	Cause	Confirmation method	Action to take
Both discharge and suction pressures are high	Excess of refrigerant	Connect gauge manifold to cycle	Recover refrigerant, then refill with the right amount of refrigerant
	Condenser cooling malfunction	Condenser becomes muddy and fins are clogged and collapsed. Defect of cooling fan rotation. Malfunction of fan motor for condenser.	Clean up, hand repair of fin and replacement
	Misaligned Expansion valve or thermal sensing tube of the Expansion valve is not fit on regularly. (Excess opening of the Expansion valve)	Defective refrigerant flow control, the thermal sensing tube is not closely in contact with the evaporator pipe	Adjustment or replacement
	Air mixed in refrigeration cycle	Just after compressor stops, discharge pressure will come down immediately to 0.19 - 0.29 MPaG (3 - 4 kgf/cm²)	Evacuate air from cycle, the charge with the adequate amount of refrigerant
Discharge pressure is high and suction pressure is low	Refrigerant cycle is clogged between compressor and condenser	Appreciable temperature difference at the clogged location	Clean up inside the cycle or replace the part
Discharge pressure is low and suction pressure is high	Defect of the compressor valve or gasket	Discharge and suction pressures balance immediately after the compressor stops. (Defective compression of compressor)	Replace the compressor

5-Tightening torques

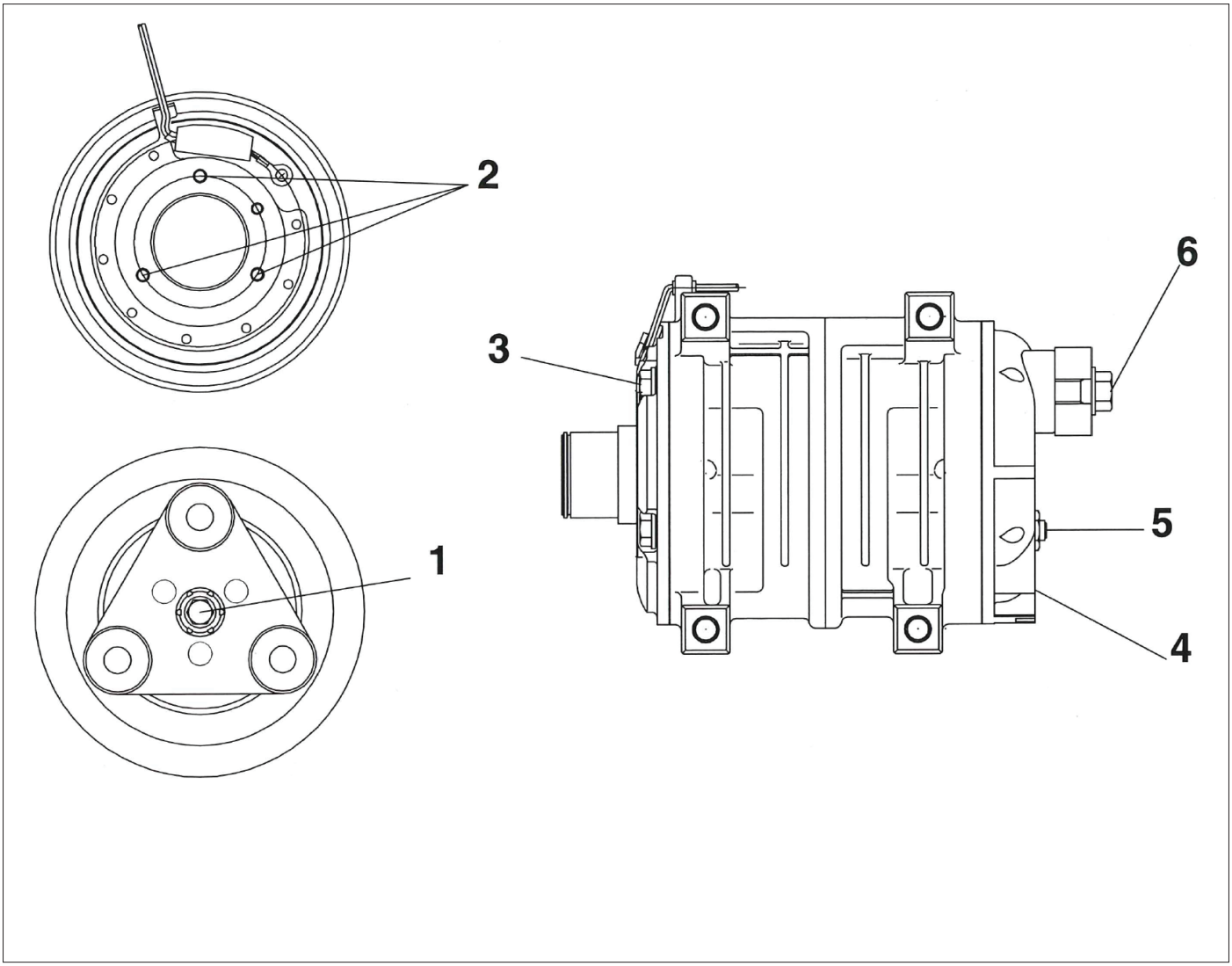

Part	Thread size	Tightening torque
1. Armature Bolt	M6 x 1.0	**12 - 14 N·m** (8.9 - 10.3 lbf·ft)
2. Field coil screw	M5 x 0.8	**4 - 6 N·m** (3.0 - 4.4 lbf·ft)
3. Body bolt	M8 x 1.25	**17 - 21 N·m** (12.5 - 15.5 lbf·ft)
4. Oil drain plug	M8 x 1.25	**13 - 15 N·m** (9.6 - 11 lbf·ft)
5. Pressure Relief valve	3/8-24UNF	**8 - 10 N·m** (5.9 - 7.4 lbf·ft)
6. Connector fixing bolt	M10 x 1.5	**20 - 24 N·m** (14.8 - 17.7 lbf·ft)
7. Fittings and ports	3/4-16UNF 7/8-14UNF 1-14UNS	Maximum torque: **27** (2.8 , 20) Maximum torque: **37** (3.8 , 27) Maximum torque: **47** (4.8 , 35)

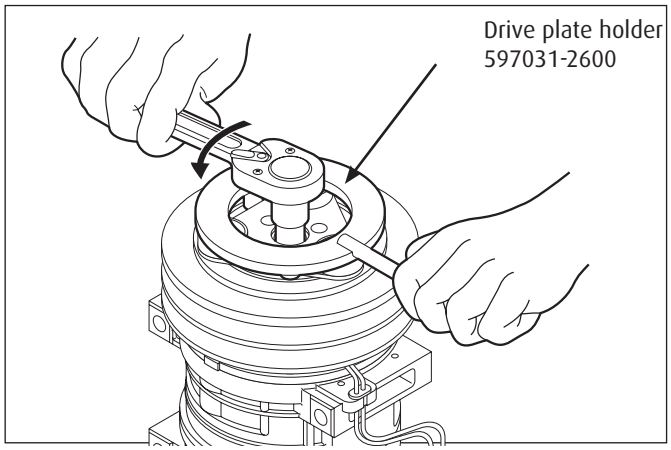

Magnetic clutch

Removal

1. Remove the center bolt using the drive plate holder (597031-2600) to prevent armature assembly rotation.

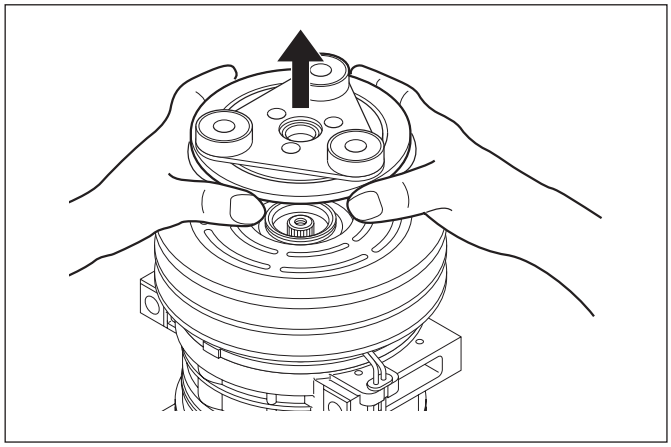

2. Remove the drive plate using the drive plate puller. Remove the shims from the compressor drive plate or drive shaft.

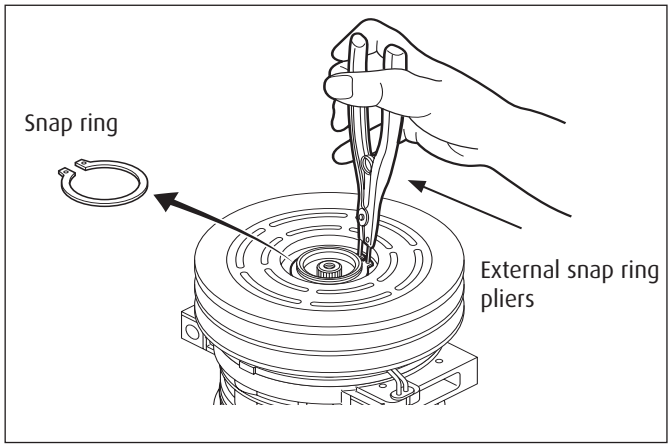

3. Remove the snapring using external snapring pliers.

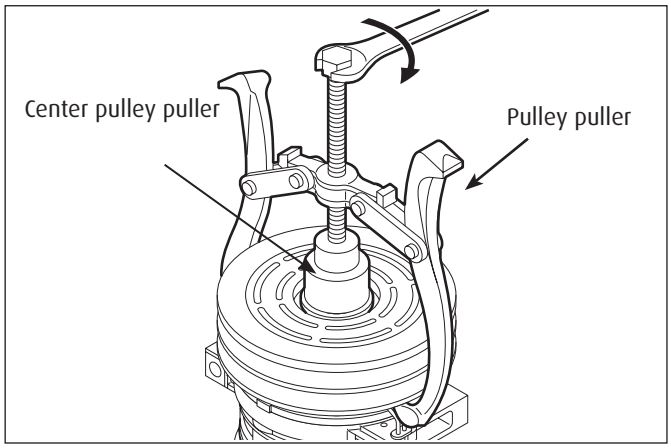

4. Position the center pulley puller at the end of the driveshaft.
5. Attach a suitable pulley puller to the pulley. Hook the puller claws to the edge of the pulley as shown.
6. Tighten the center pulley puller bolt to remove the pulley.

CAUTION!

Do not clip the puller claws into the pulley groove to prevent pulley groove damage.

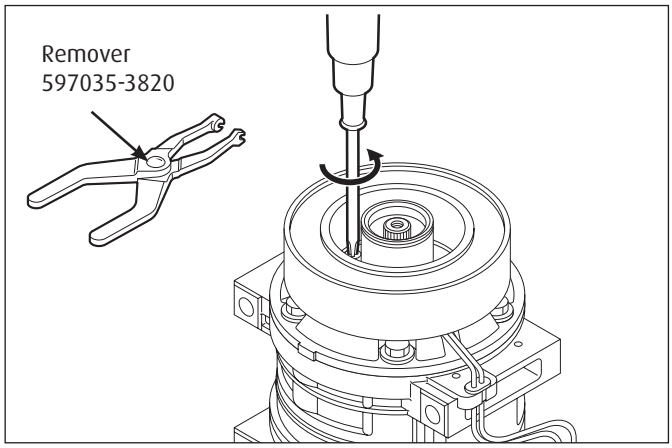

5. Remove the field coil's lead wire bushing using the remover (597035-3820).
6. Remove the three field coil/compressor screws. Then remove the field coil.

CAUTION!

Do not hold the field coil by the harness.

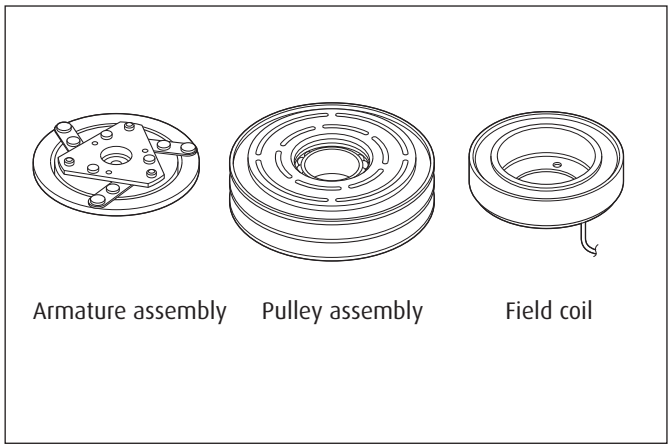

Inspection

1. If the contact surface has been damaged by excessive heat, the armature and pulley must be replaced.
2. Check the appearance of the pulley assembly. If the contact surface of the pulley is excessively grooved due to slippage, both the pulley and armature must be replaced, The contact surfaces of the pulley assembly must be cleaned with a suitable solvent before reinstallation.
3. Check the field coil for a loose connector or cracked insulation.

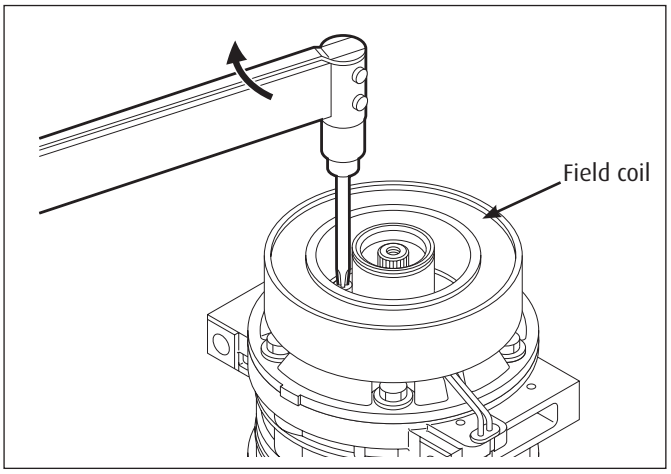

Magnetic clutch

Installation

1. Install the field coil on the compressor (with the harness on top) and tighten the mounting screws to the specified torque.
   Specified torque: 4 ~ 6 N·m
   {0.4 ~0.6 kgf·m, 3.0 ~ 4.4 lbf·ft}

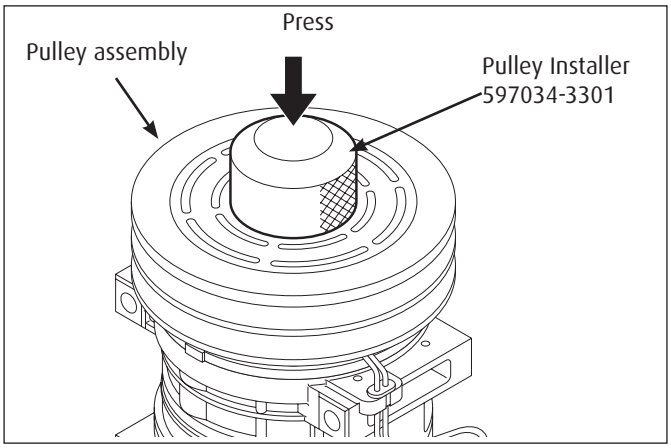

2. Carefully place the wire harness bushing.
3. Install the pulley assembly using the pulley installer (597034-3301) and a hand press.

CAUTION!

Use only a press to install the pulley assembly. Do not use a hammer. A hammer will damage or deform the pulley.

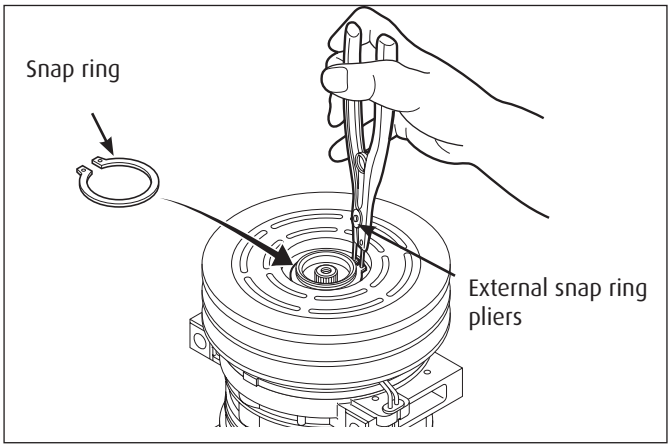

4. Install the snap ring (beveled edge up) using external snapring pliers.

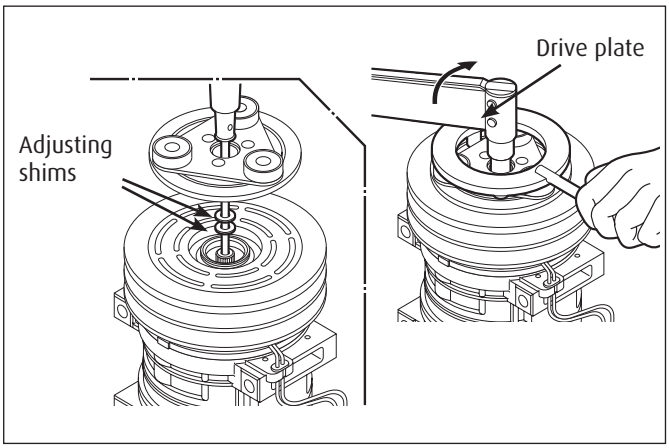

5. Install the armature assembly on the driveshaft together with the original shim(s). Press the armature assembly down by hand.
6. Install the center bolt and tighten the bolt to the specified torque using the drive plate holder (597031-2600) to prevent armature assembly from the rotating.
   Specified torque: 12 ~ 14 N·m
   {1.2 ~ 1.4 kgf·m, 8.9 ~ 10.3 lbf·ft}

CAUTION!

After tightening the center bolt, check that the pulley rotates smoothly.

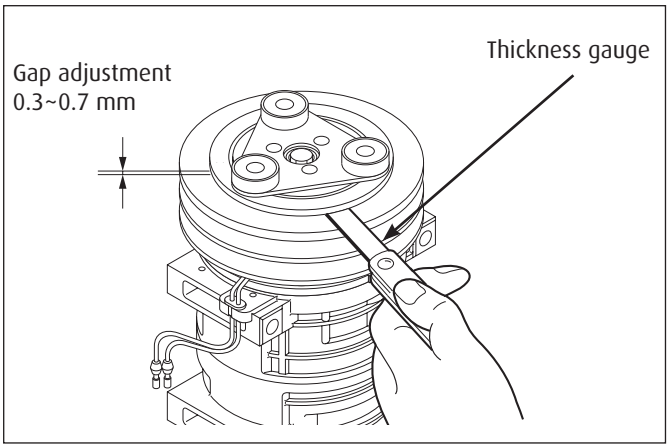

7. Check that the clutch clearance is as specified. If necessary adjust the clearance using shim(s).

Adjusting shims are available in the following thickness:

Shim Part No	Thickness
596541-1900	0.1 mm (0.0039 in)
596541-2000	0.3 mm (0.0118 in)
596541-2100	0.5 mm (0.0197 in)

Specified clearance: 0.3 ~ 0.7 mm
(0.01 ~ 0.03 in)

8. Run-in the clutch as described on page 18.

Shaft seal assembly

Removal

1. Remove the magnetic clutch assembly as described on page 30.
2. Remove the drain plug and then drain the oil.
3. Remove the five bolts securing the heads.

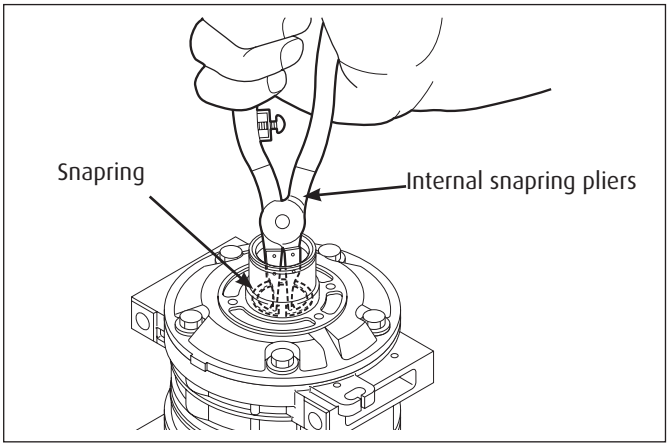

4. Remove the snapring using internal snapring pliers.

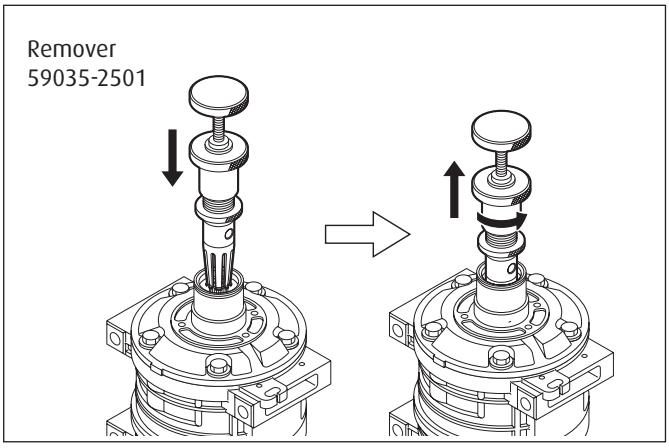

5. Insert the remover (597035-2501) into the shaft seal and turn it untill it hits the shaft seal case. Then, pull the remover up to remove the shaft seal.

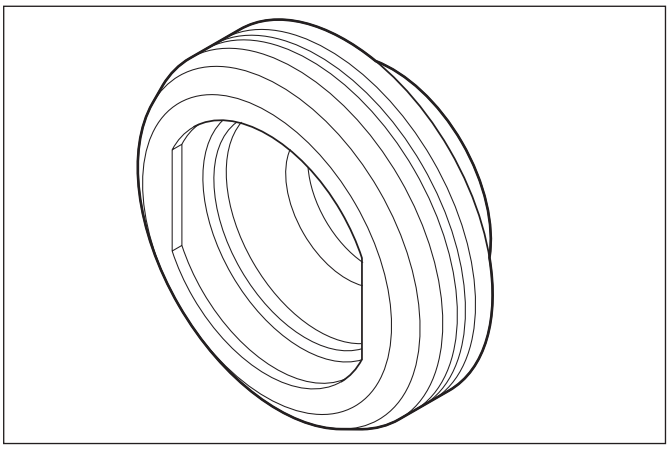

Inspection

The shaft seal must not be reused.
Always use a new shaft seal when reassembling the compressor. Ensure that the seal seat is free from lint and dirt that could damage the shaft seal lip.

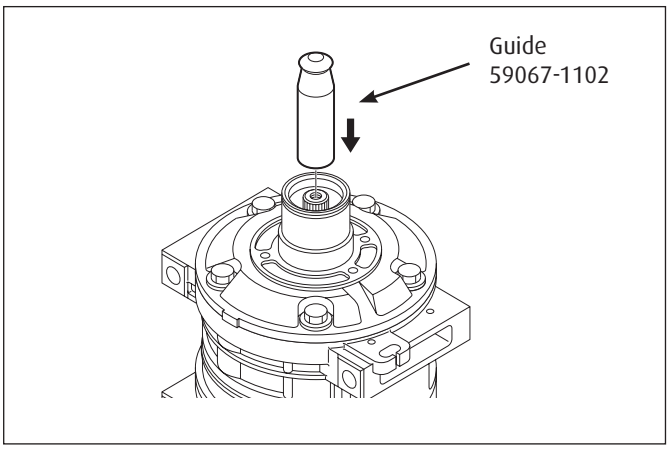

Installation

Before installation refer to "Inspection" p.31

1. Clean the sealed section of the front cylinder head.
2. Coat the new shaft seal and the front cylinder head with clean compressor oil. If the slip faces are dirty, clean them with thinners and, after drying the clean faces, apply clean compressor oil to them.

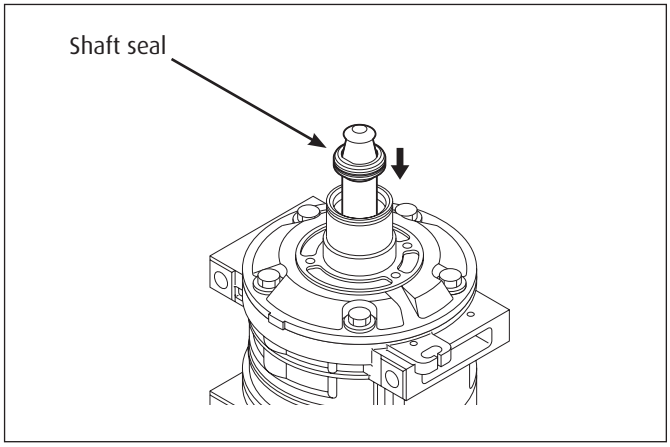

3. Fit the guide (597067-1102) onto the end of the drive shaft.
4. Insert the shaft seal through the guide into the front cylinder head.

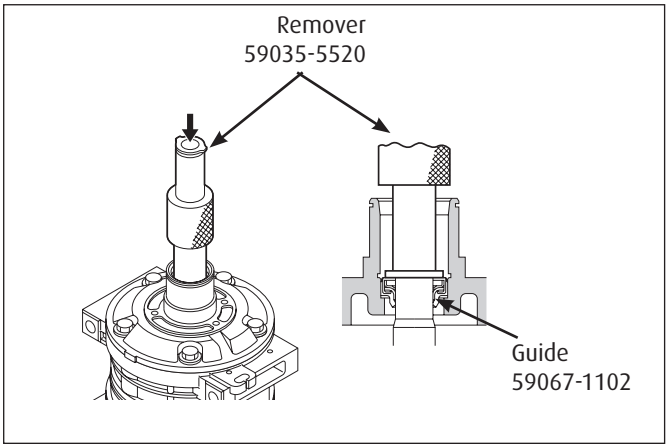

5. Install the shaft seal as far as possible into the front cylinder head using the installing end of the remover (597035-5520). Remove the guide (597067-1102) from the drive shaft.

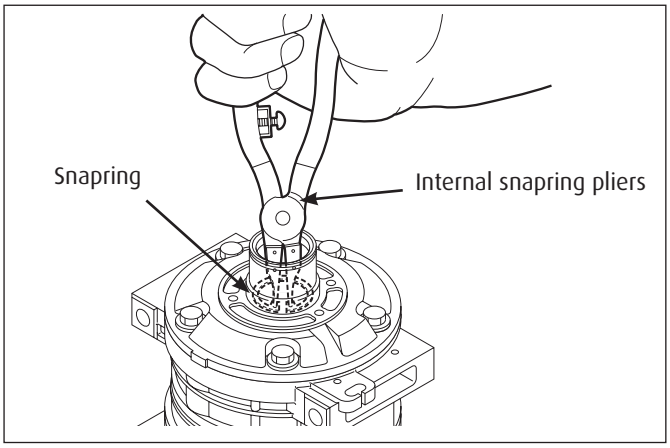

6. Install the snap ring using internal snap ring pliers. Press the snap ring using the installing end of the remover (597035-5520) until a "click" is heard.

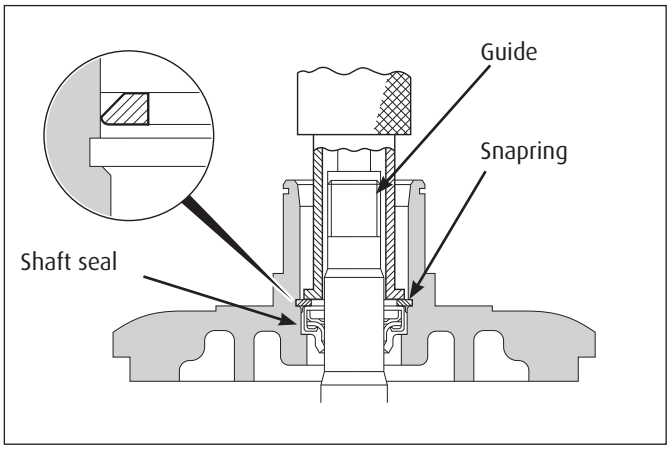

Note

1. When installing the snap ring, the round edge of the snap ring must face downward, as shown on the left-hand figure.
2. Check the snap ring is properly installed, as shown on the left-hand figure.

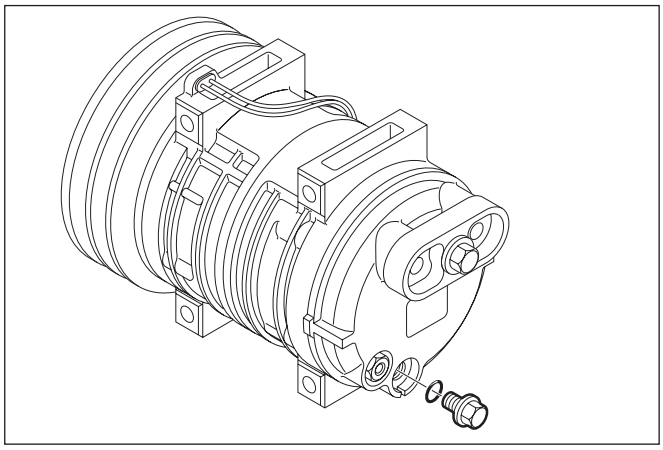

Install the oil drain plug with a new O-ring, thinly coated with clean compressor oil, and tighten it to the specified torque.

Specified torque: 13 ~ 15 N·m
{1.3 ~ 1.5 kgf·m, 9.6 ~ 11 lbf·ft}

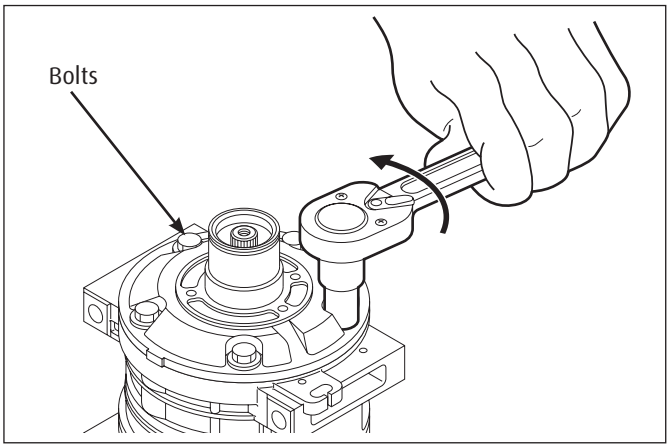

Cylinder heads (Front & Rear)

Disassembly

1. Remove the magnetic clutch assembly as described on page 30.
2. Remove the drain plug and then drain the oil.
3. Remove the five bolts securing the heads.

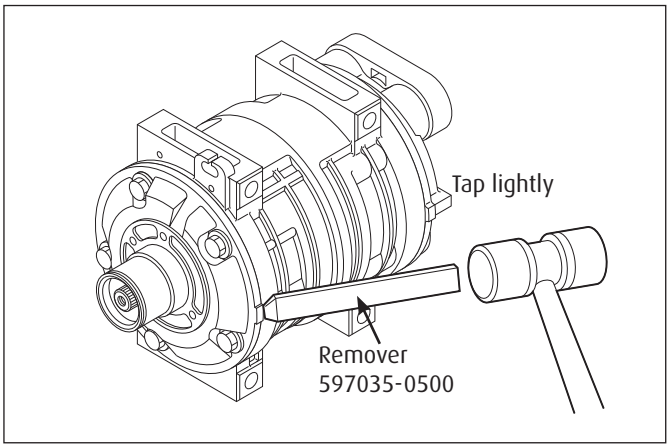

4. Alternately tap the two projections on the front head using the remover (597035-0500) and mallet to remove the front cylinder head.

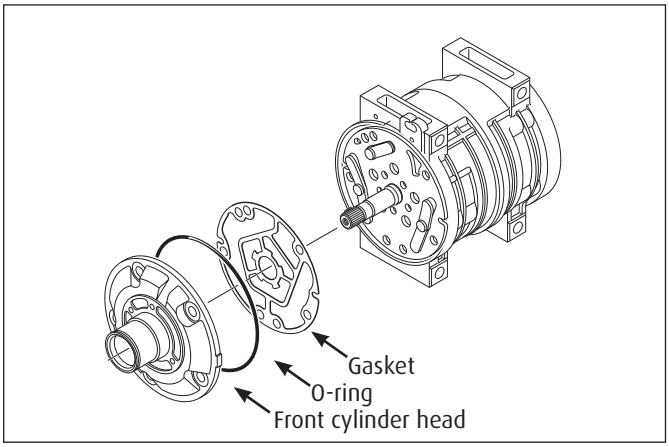

5. Remove the O-ring from the front cylinder head, and then remove all the gasket material from the cylinder head.

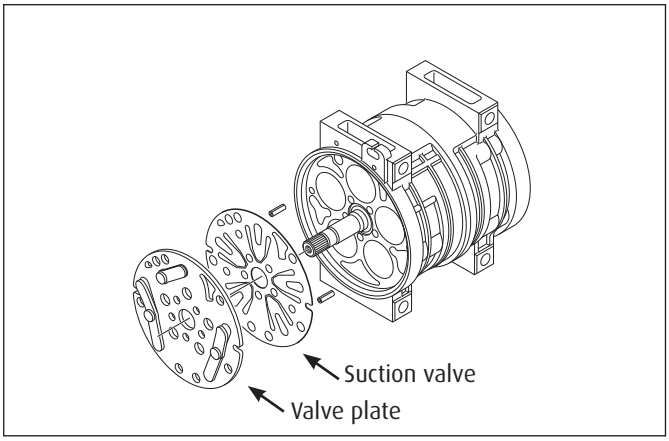

6. Remove the valve plate and suction valve from the cylinder shaft assembly and then remove all the gasket material from the valve plate.

7. To remove **the rear cylinder head,** alternately tap the two projections on the front head using the remover (5970350500) and mallet.

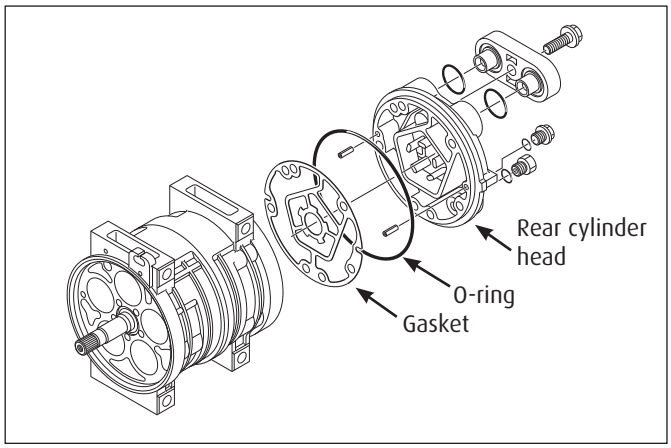

8. Remove the O-ring from the rear cylinder head, and then remove all the gasket material from the rear cylinder.

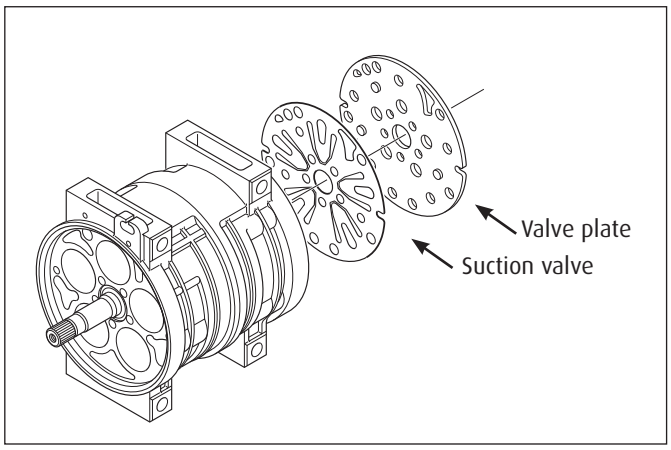

9. Remove the valve plate and suction valve from cylinder shaft assembly, then remove all the gasket material from the valve plate.

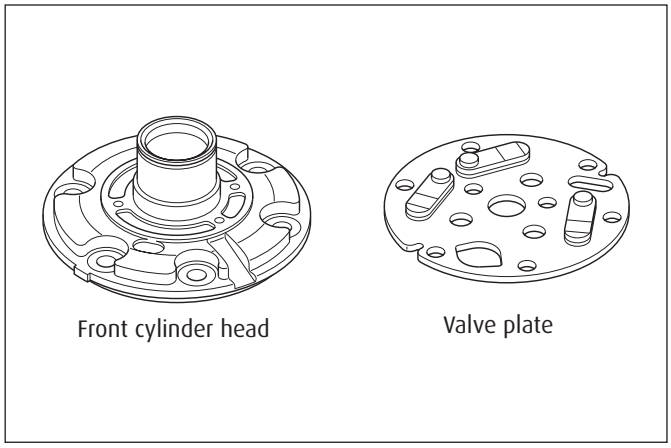

Inspection

Check the front and rear valve plates for scratched, bent or damaged parts.
Inspect both cylinder heads and both valve plates for nicks or burrs on the sealing surfaces.
Clean both cylinder heads and both valve plates or replace them if they are cracked or damaged.
Check that none of the passengers in the valve plates are blocked.

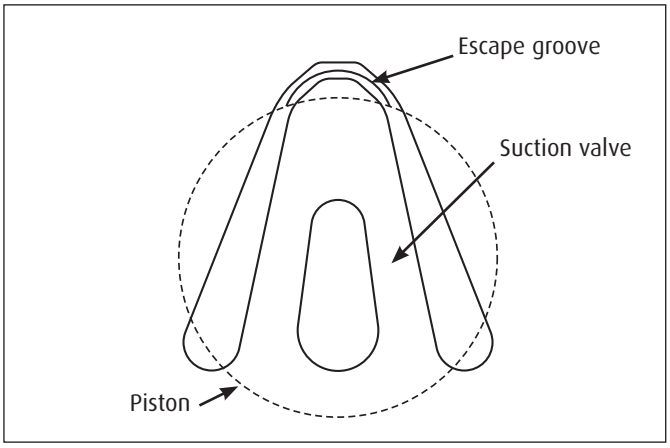

Reassembly

Rear cylinder head

1. Place the cylinder shaft assembly on the bench with the rear side up.
2. Install the rear suction valve so that it matches the roll pins.

CAUTION!

Ensure each valve matches each cylinder valve escape groove.

3. Install the rear valve plate on the rear suction valve.

CAUTION!

Do not mistake the front valve plate for the rear one.

4. Coat the new gasket with clean compressor oil and install it on the rear valve plate.

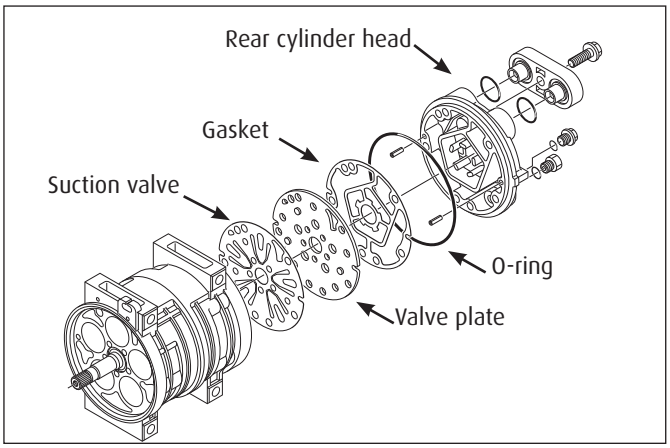

5. Coat the new O-ring with clean compressor oil and install it on the rear cylinder head.
6. Install the rear cylinder head.

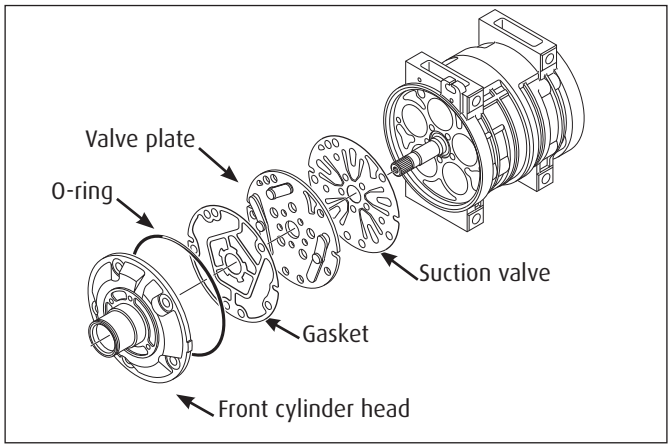

Front cylinder head

1. Place the cylinder shaft assembly on the bench with the front side up.
2. Install the front suction valve so that it matches the pins.

CAUTION!

Ensure each valve matches each cylinder's valve escape groove.

3. Install the front valve plate on the front suction valve.
4. Coat the new gasket with clean compressor oil and install it on the front valve plate.
5. Position the guide on the shaft.
6. Coat the new O-ring with clean compressor oil and install it on the front cylinder head.
7. Install the front cylinder head.

CAUTION!

Align the roll pins and tap the head lightly and evenly with a plastic hammer.

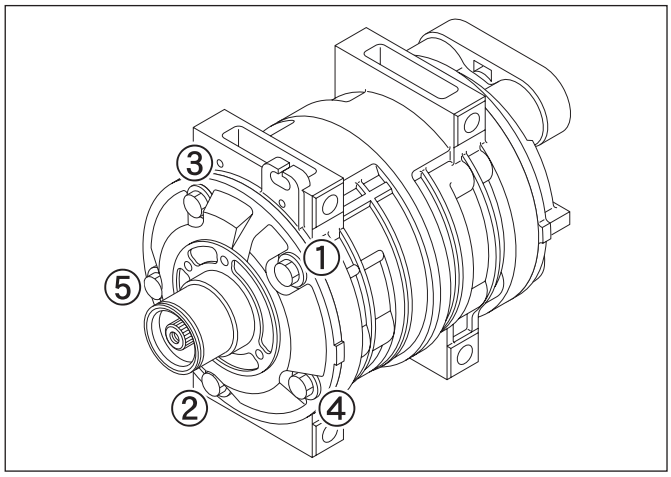

8. Mount the new gaskets on the through-bolts. Insert the five through-bolts from the front cylinder head side and tighten them to the specified torque. Each bolt should be gradually tightened in three or more stages to ensure the specified torque.
   The bolts should be tightened in the order shown on the left-hand figure.
   Specified torque: 20 ~ 24 N·m
   {2.0 ~ 2.4 kgf·m, 14.8 ~ 17.7 lbf·ft}

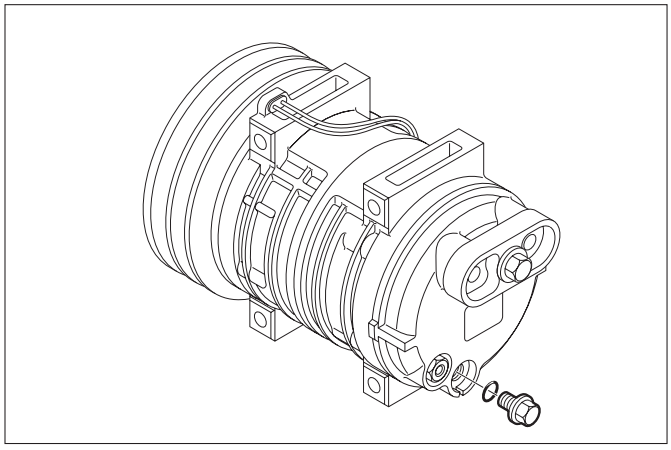

9. Install the oil drain plug with a new O-ring, thinly coated with clean compressor oil, and tighten it to the specified torque.
   Specified torque: 13 ~ 15 N·m
   {1.3 ~ 1.5 kgf·m, 9.6 ~ 11 lbf·ft}
10. Fill the compressor with the specified amount of clean compressor oil through the suction-side connector.
11. Install the magnetic cluch (p. 32)
12. Run-in compressor (p. 18)
13. Carry out the leak test (p. 19)

Compressor tools

Part name	Part No	Reference page	Application
Remover	597032-2501	36	For removing cylinder head and cylinder block
Shaft Seal Remover	597035-5520	34	For removing shaft seal
Guide	597067-1102	34	For installing shaft seal
Drive plate holder	597031-2600	29	To fix armature

Test and inspection tools

Part name	Part No	Reference page	Application
Gas leak detector	597001-1020	19	For detecting gas leaks

10- Service parts

1.Compressor body service kits, sets and parts

Item*	Part name	Reference	Quantity
OVERHAUL SET (O-RING SET + GASKET SET + SHAFT SEAL+ TRUST BEARING)		566211-9520	-
O-RING SET		566211-9720	-
	O-ring body (front & rear head)	569300-3100	n=2
	O-Ring (center)	569300-3200	n=1
	O-Ring (plug)	569300-2600	n=1
	O-Ring (PRV)	569300-9100	n=1
	O-ring (Fitting)	569300-2800	n=2
GASKET SET		566211-9820	-
	Gasket (front and rear head)	566128-8000	n=2
	Gasket (bolt)	596174-0900	n=5
SHAFT SEAL SET		569942-1120	-
	Shaft seal assembly	569200-3820	n=1
THRUST BEARING SET		596196-0520	-
	Thrust bearing	566196-0200	n=2
OTHER COMPRESSOR PARTS			-
	Valve plate assy (front)	566018-3820	n=1
	Valve plate assy (rear)	566018-3920	n=1
	Suction valve	566107-1700	n=2

*See Product description - Exploded view (p.7) except for Trust bearing

2.Oil

Item	Part name	Reference	Quantity
-	ZXL 100PG (250 cc)	569900-0600	250cc

Notes

Notes

Notes

VALEO JAPAN - TM21
for HFC-134a
SERVICE MANUAL
Version: WW21-15006.02EN
Published by: VALEO JAPAN CO, LTD.

Copyright © 2015, VALEO JAPAN CO, LTD.

For any inquiry regarding the present service manual, contact us at vc-oura-sales@valeo.com

Valeo TM21 Compressor

Valeo TM21 Benefits

High reliability

Integration flexibility

Great cooling capacity

Enhanced performance

Lower fuel consumption

Compact & robust design

Improved field serviceability

Reduced noise and vibrations

Staggering value through innovation

valeo added™

www.valeocompressors.com

Asia
39 Sendai, Kumagaya-shi
Saitama-ken 360-0193 Japan
Phone: +81 (0) 48 539 3800
Fax: +81 (0) 48 539 3843
Email: vc-oura-sales@valeo.com

China
No.2677 Shiji Avenue, Eco. & Tec. Dvt
Zone 130031 Changchun, Jilin PRC
Phone: +86 (0) 431 8499 2025
Fax: +86 (0) 431 8499 2004
Email: vc-changchun-sales@valeo.com

Europe, Middle East & Africa
8, rue Louis Lormand ZA de l'Agiot
Le Mesnil Saint Denis Cedex,
78321 La Verriere
Phone: +33(0)1 30 13 50 27
Email: vc-angers-sales@valeo.com

Americas
2520 Esters Blvd #100
Dallas, TX 75261 United States
Phone: +1 972 456 1077
Fax: +1 972 456 1090
Email: vc-dallas-sales@valeo.com

Copyright © 2015 Valeo Japan CO., LTD. All Rights Reserved.